FUSELAGE (SIDE)

1/5 SCALE KINGFISHER OS 2U

DESIGNED & DRAWN BY DOUG MAC BRIEN

COMMERCIAL RIGHTS RESERVED 1982

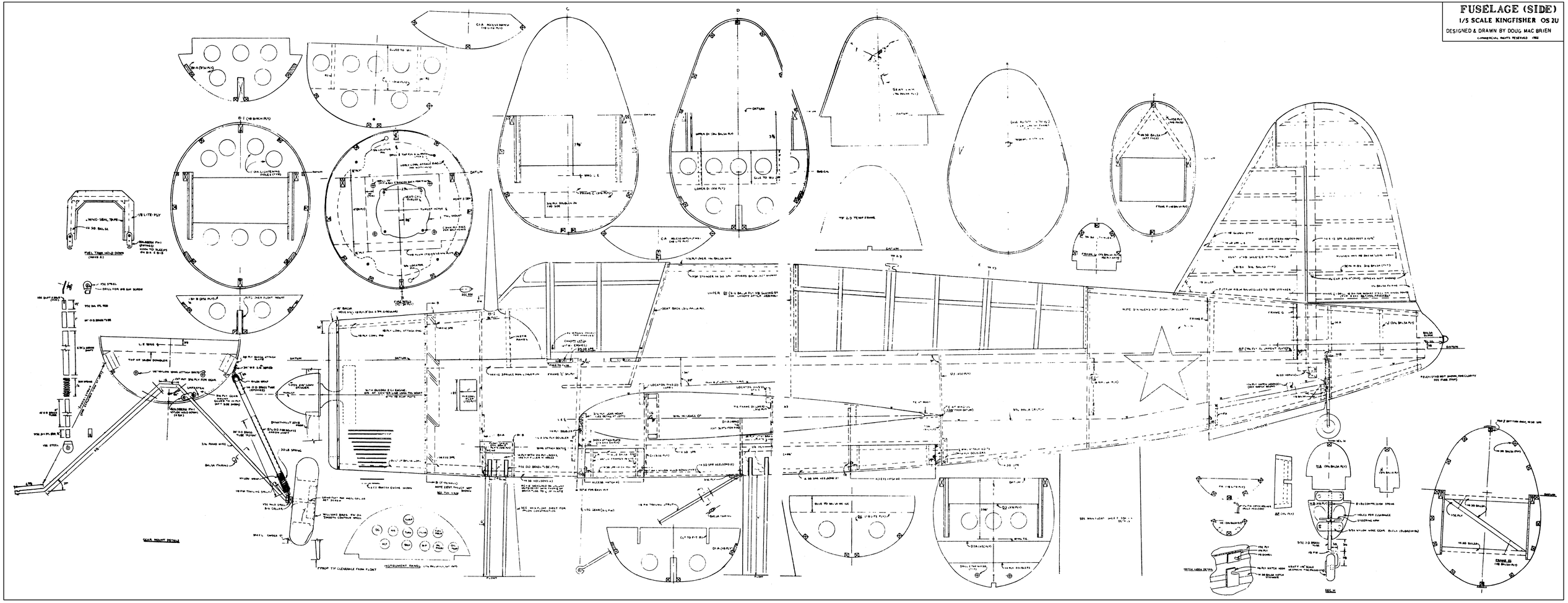

FUSELAGE (TOP)

1/5 SCALE KINGFISHER OS 2U

DESIGNED & DRAWN BY
DOUG MAC BRIEN

COPYRIGHT RESERVED 1986

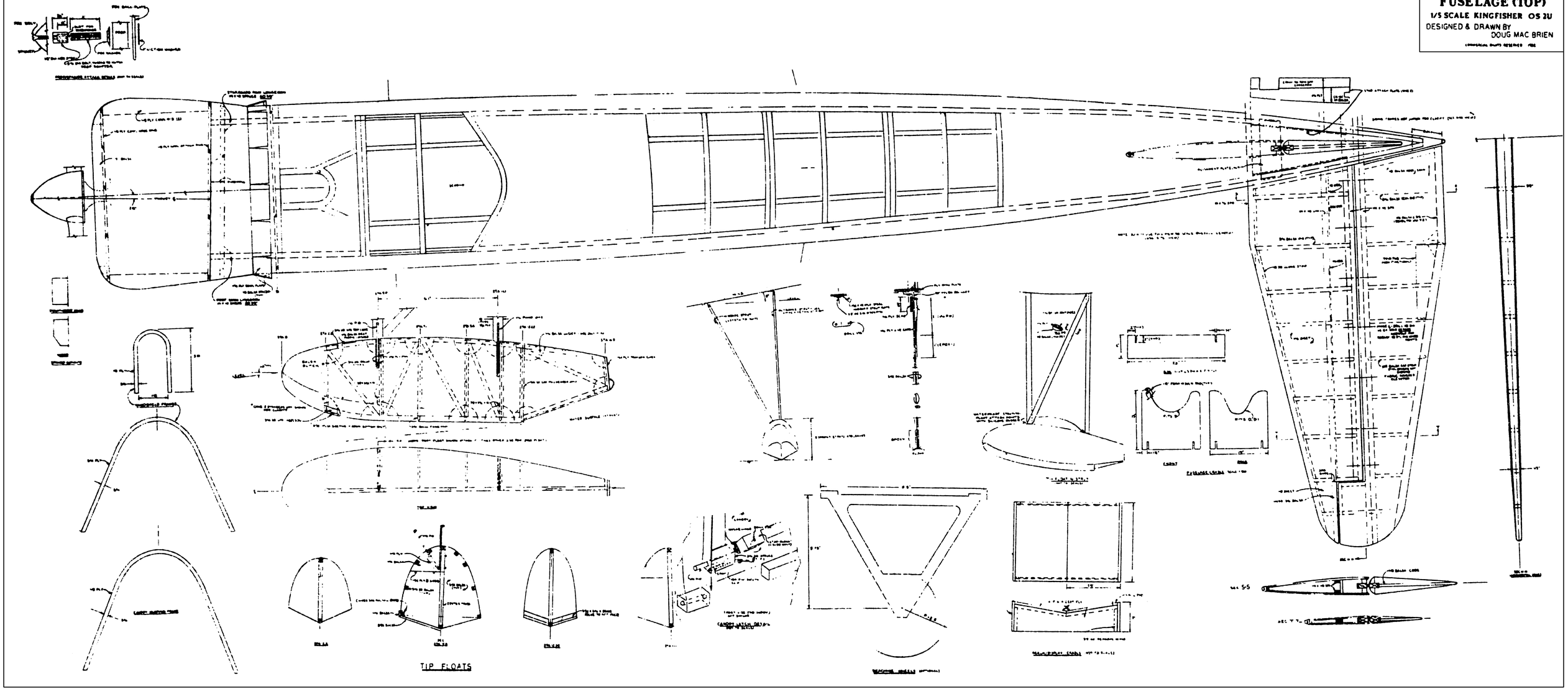

WING

1/5 SCALE KINGFISHER OS2U

DESIGNED & DRAWN BY DOUG MAC BRIEN

ORIGINAL RIGHTS RESERVED 1986

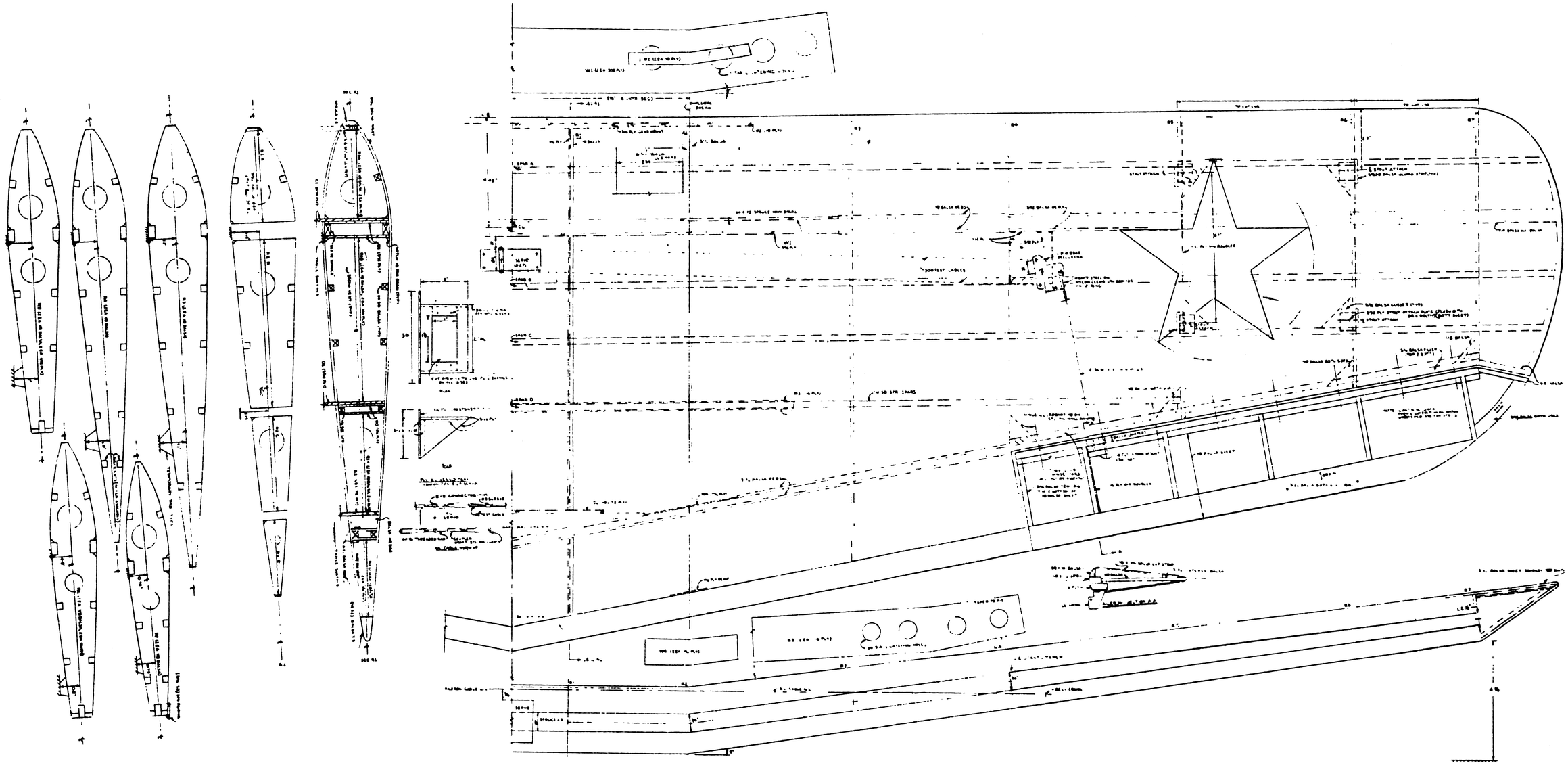

MAIN FLOAT

1/5 SCALE KINGFISHER OS2U

DESIGNED & DRAWN BY DOUG MACBRIEN

COMMERCIAL RIGHTS RESERVED 1986

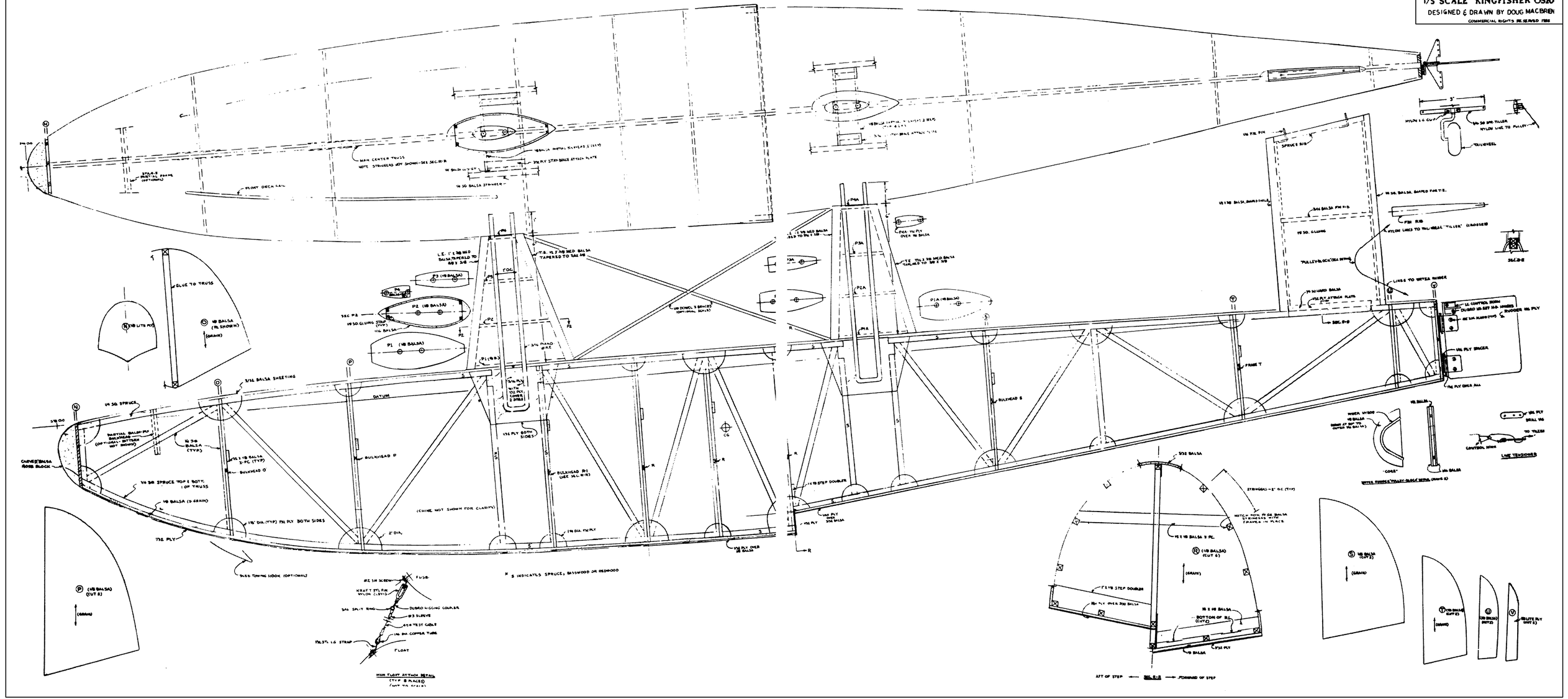

The OS2U Kingfisher, a rescue-observation airplane produced by Vought for the U. S. Navy in 1939 had one of the most illustrious records of any plane of its type in World War II. Catapulted from battleships, cruisers and a few destroyers, the Kingfisher rescued scores of aviators in the Pacific who had been shot down in combat. It was a Kingfisher which rescued Captain Eddie Rickenbacker from a life raft in the South Pacific. More than 1200 Kingfishers were built by Vought and an additional 300 by the Naval Aircraft Factory. Kingfishers also served with distinction with Britain, Uruguay, Chile, Netherlands East Indies and Mexico armed forces. The Kingfisher is the first plane to use spot welding of primary aircraft structure and the first to use non-buckling fuselage structure.

COLOR NOTES

THOUGH SOME COLORS ARE CALLED OUT IT IS SUGGESTED THE COLORS SIZE AND SHAPE OF NATIONAL INSIGNIAS BE CHECKED FOR YEAR AND AREA THE AIRCRAFT WILL DEPICT

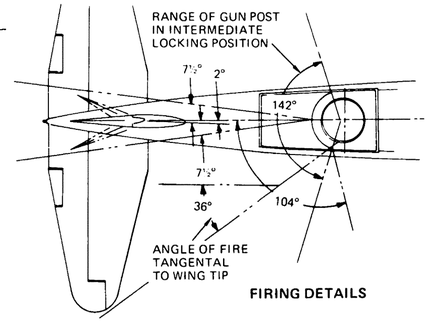

FIRING DETAILS

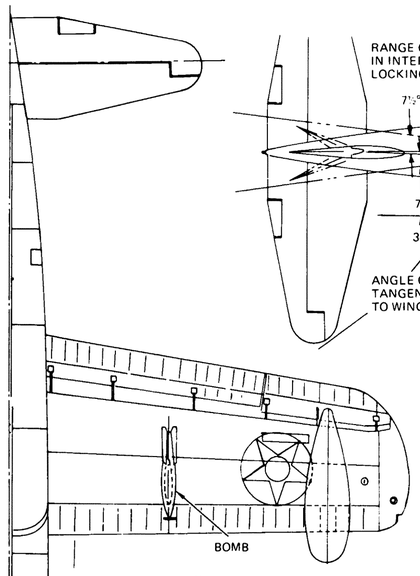

BOTTOM VIEW
(WHEEL DELETED TO CLARIFY)

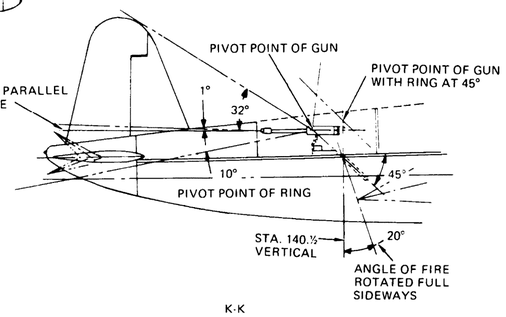

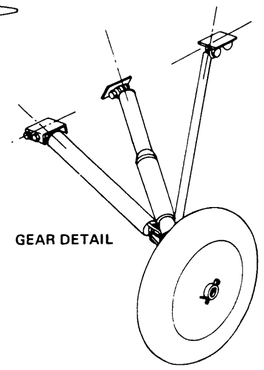

GEAR DETAIL

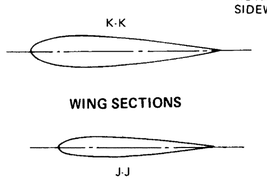

WING SECTIONS

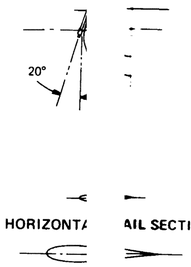

HORIZONTAL TAIL SECTIONS

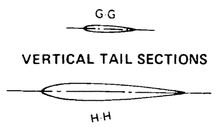

VERTICAL TAIL SECTIONS

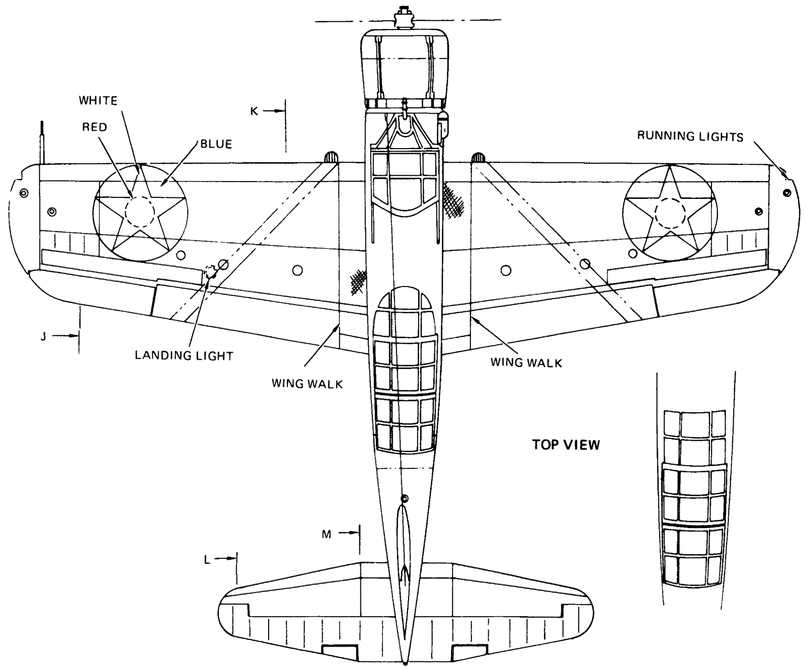

TOP VIEW

NOSE VARIATION

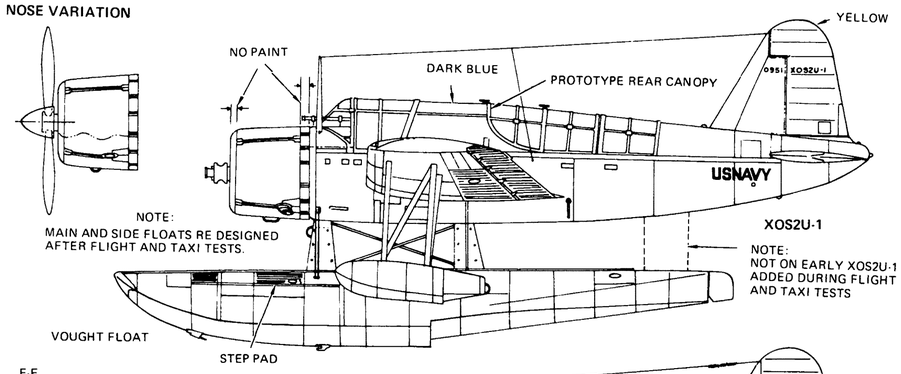

SIDE VIEWS

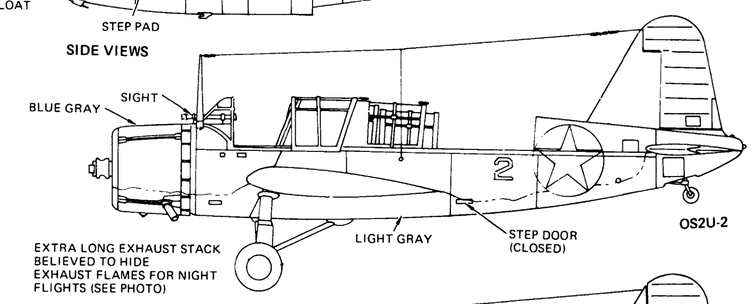

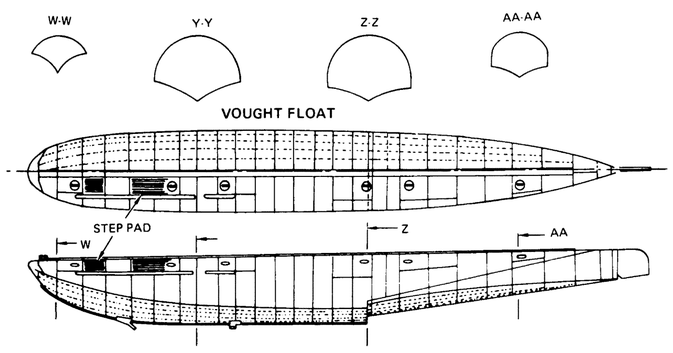

VOUGHT FLOAT

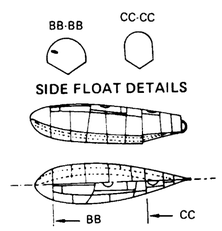

SIDE FLOAT DETAILS

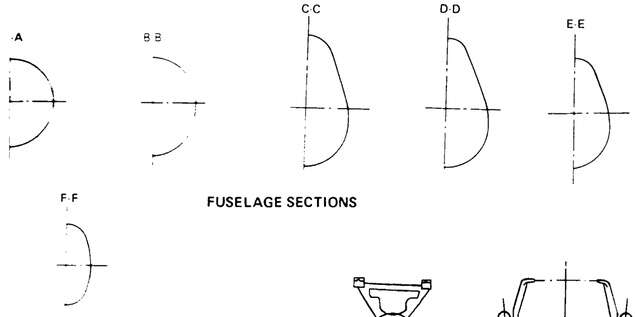

FUSELAGE SECTIONS

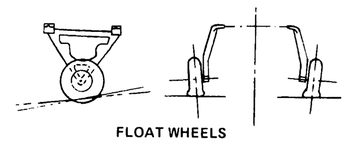

FLOAT WHEELS

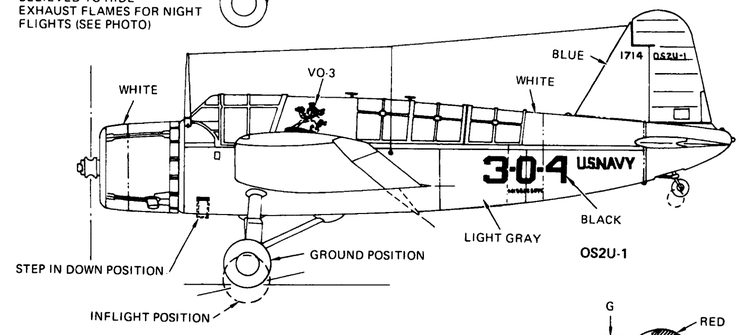

MAIN FLOAT DETAILS

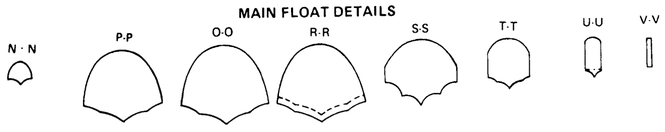

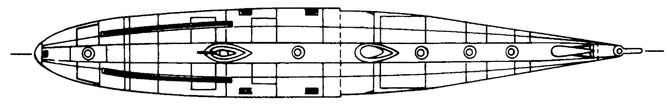

EDO FLOAT

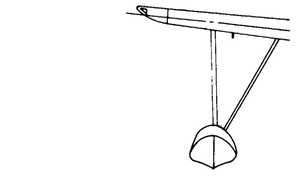

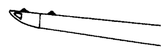

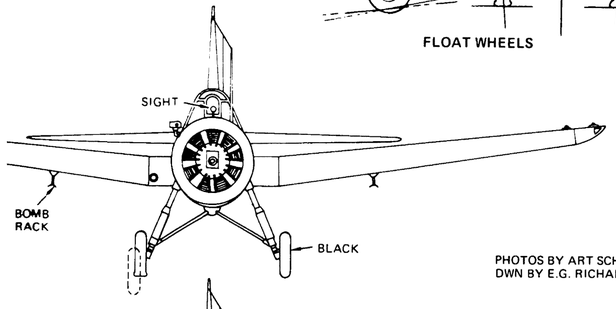

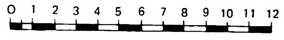

SCALE IN FT.

PHOTOS BY ART SCHOENI
DWN BY E.G. RICHARDSON

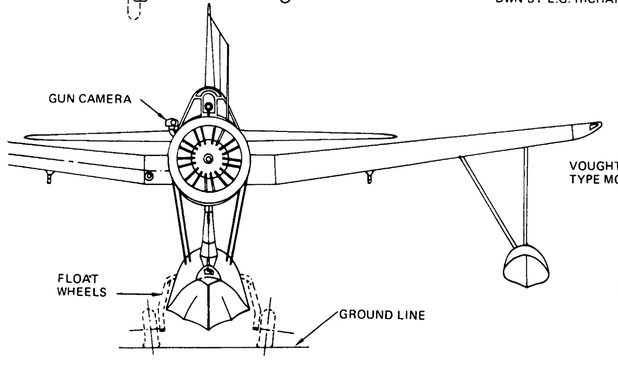

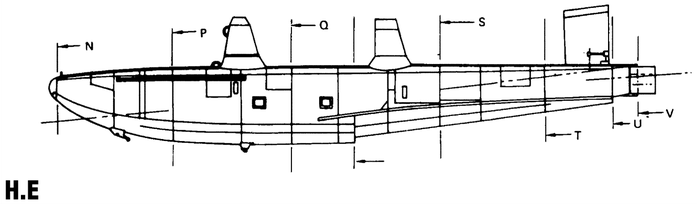

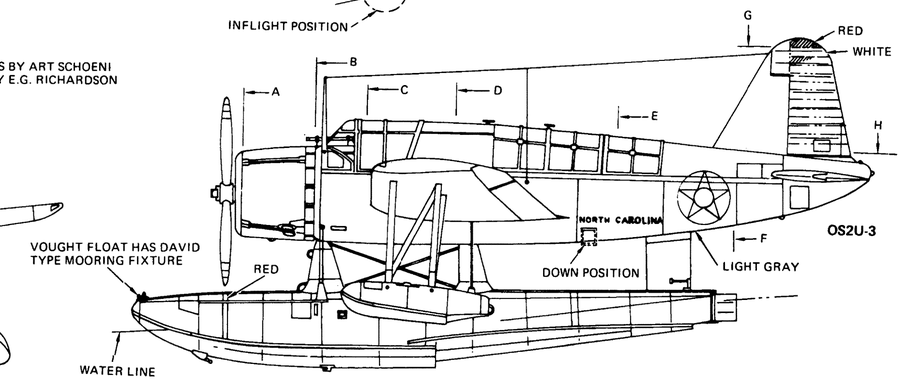

EDO FLOAT

H.E