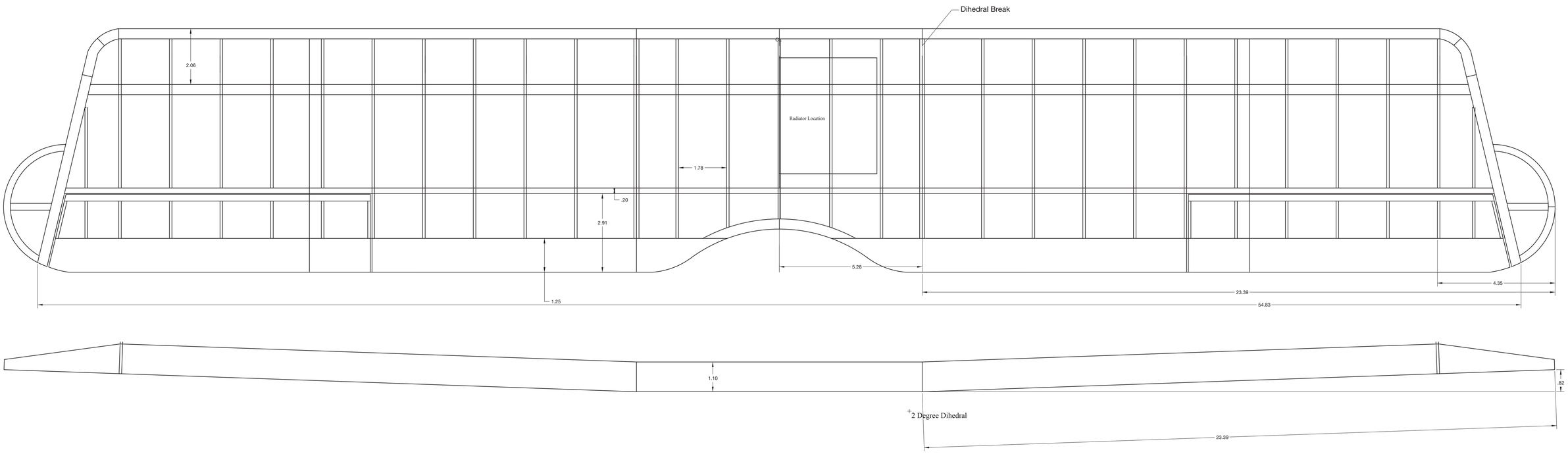

Roland DVI G

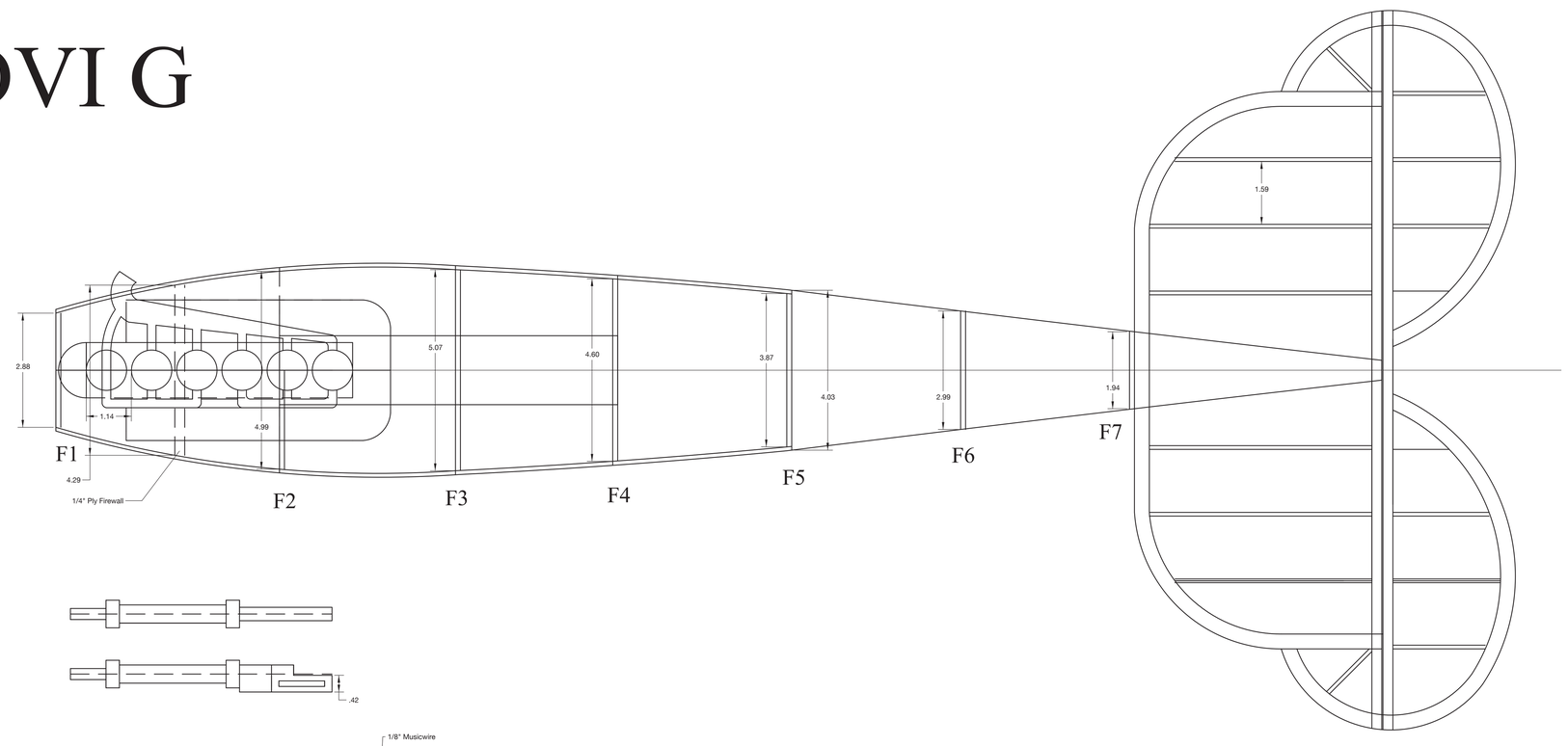

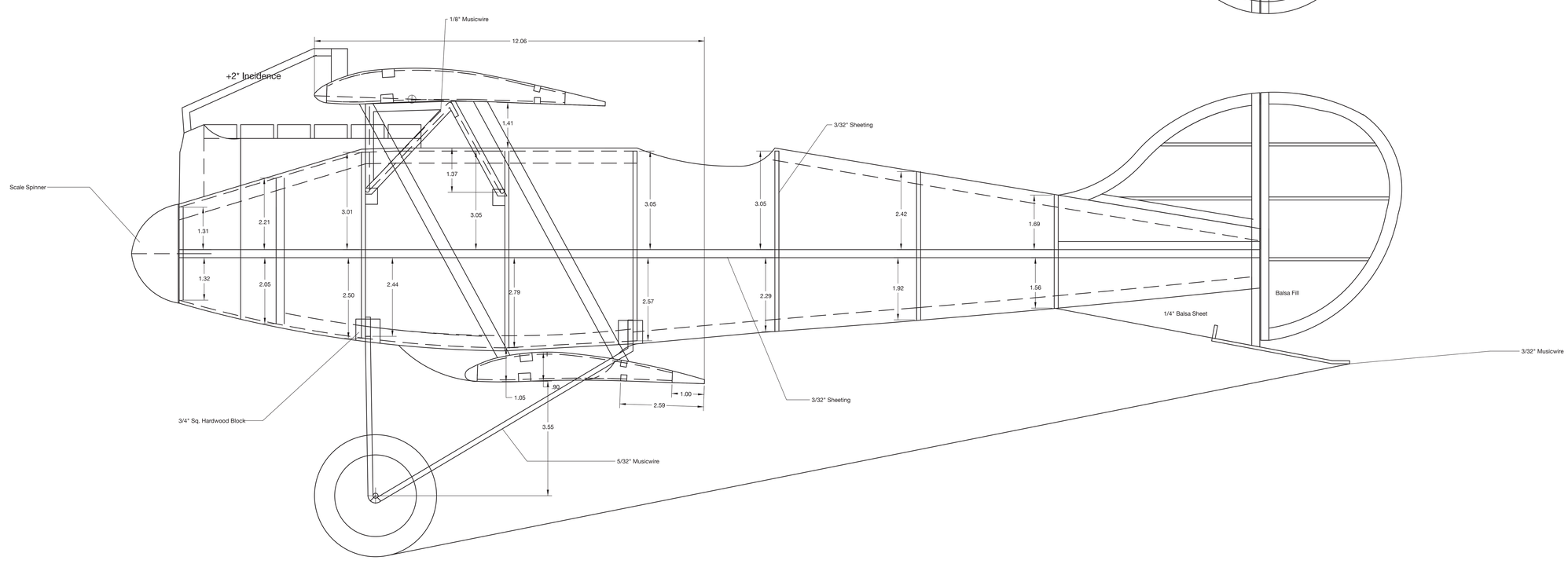

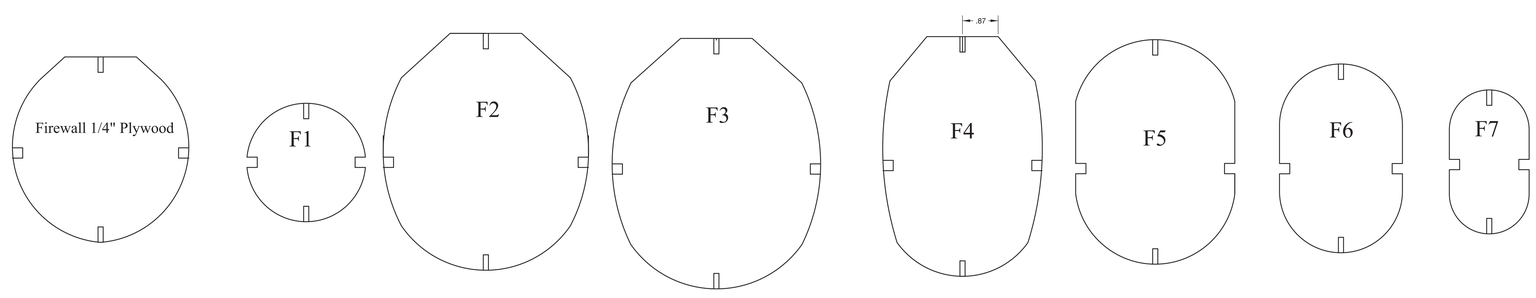
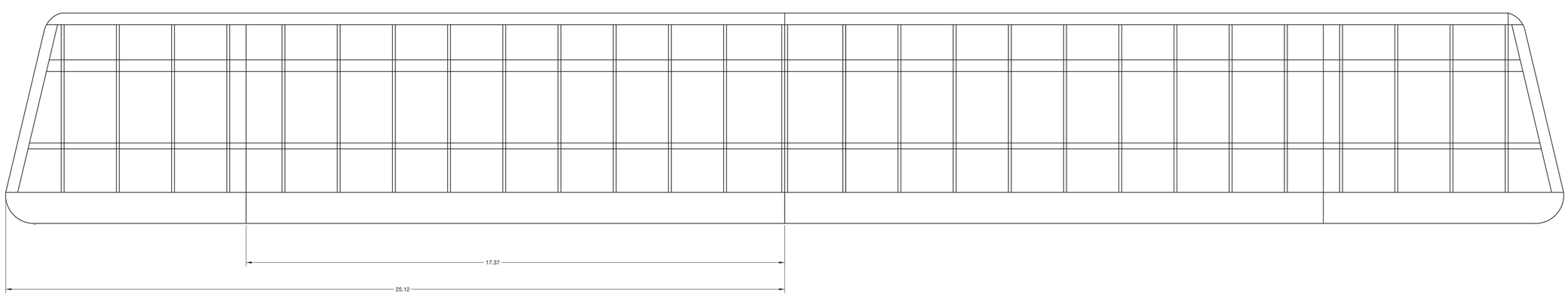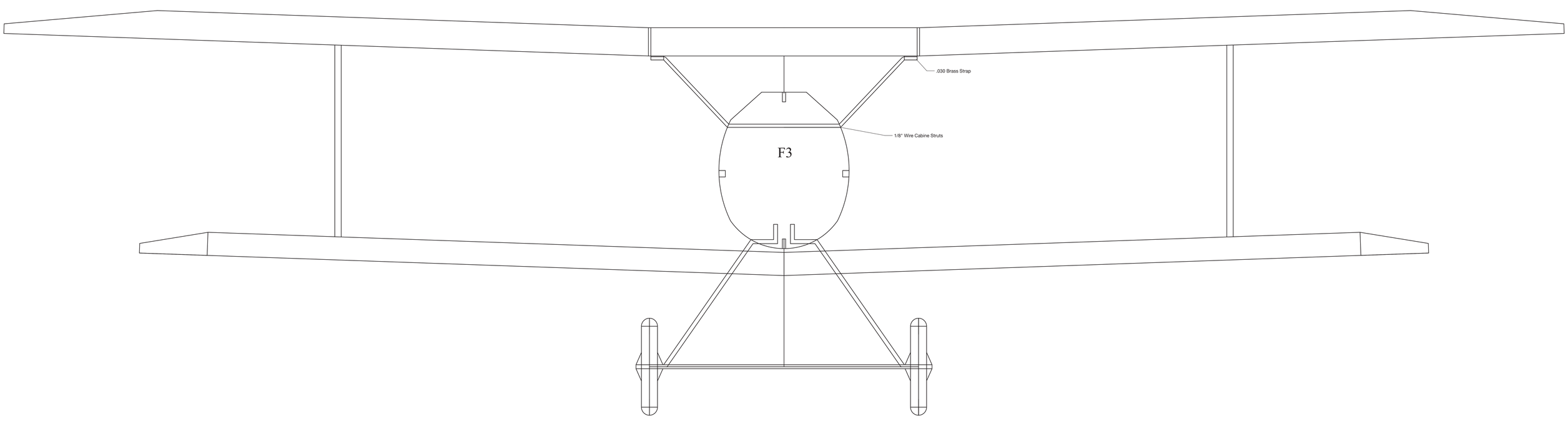
Bottom Wing