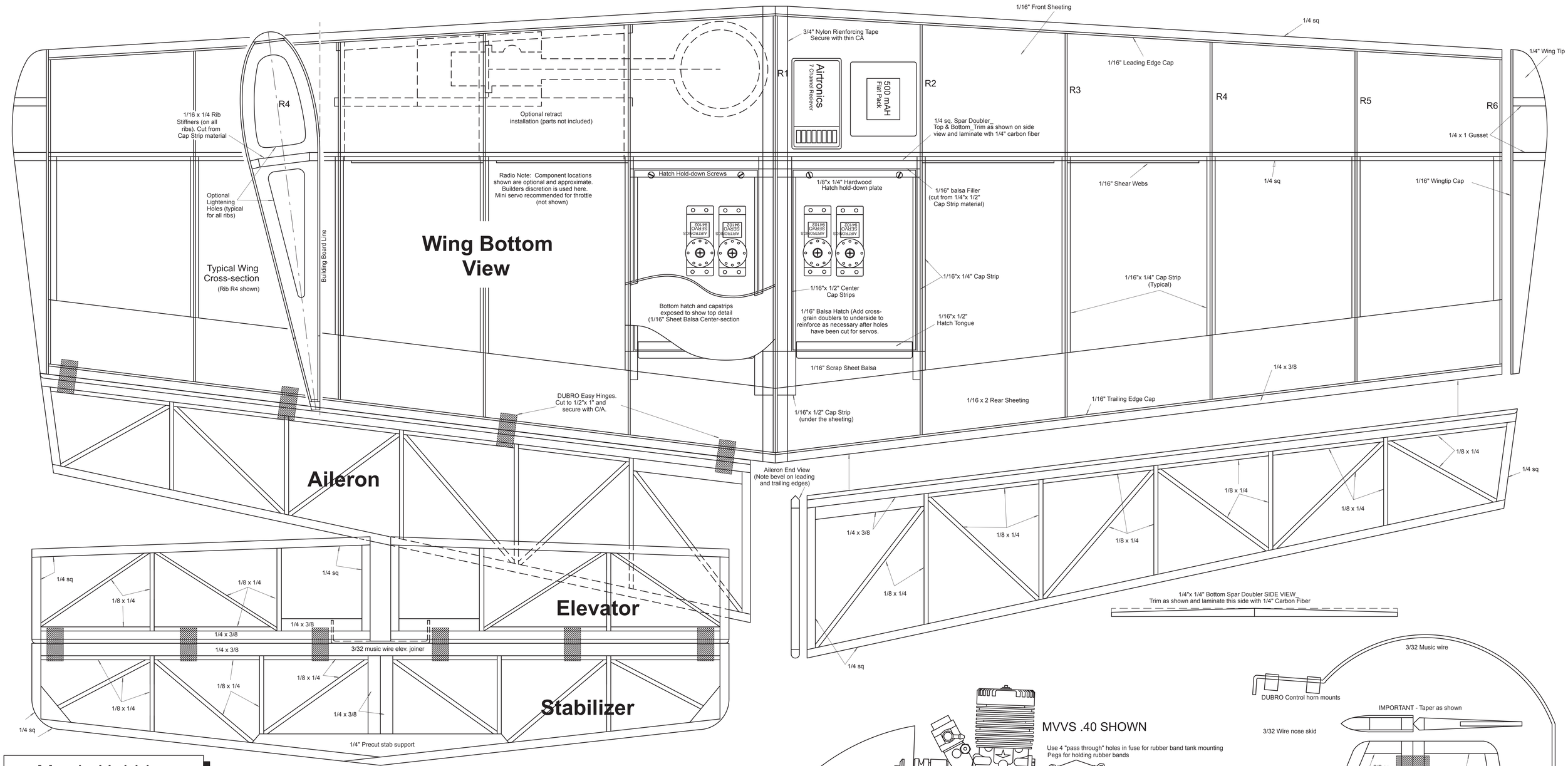

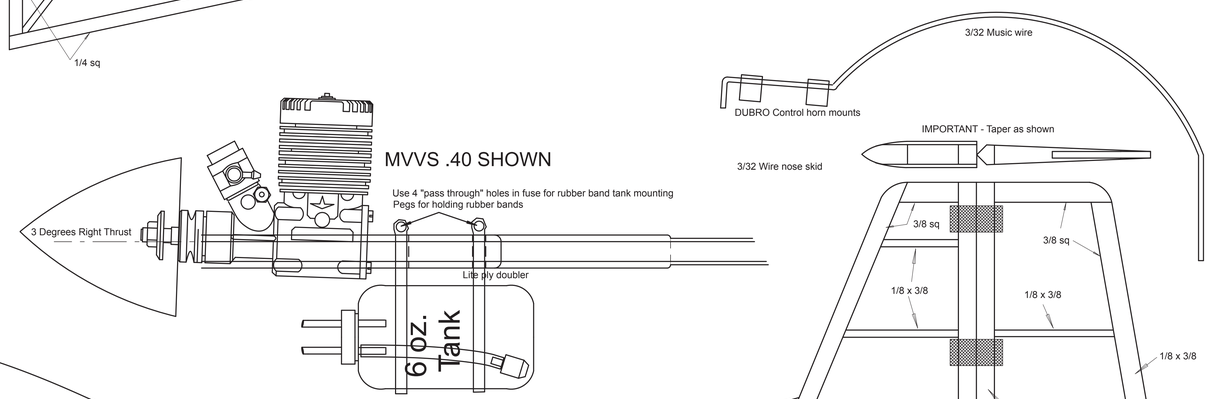

Morris Hobbies

Morris Mustang

another in the

MORRIS PROFILE SERIES

Designed By: Terry Dench 8/31/95

NOTE: All parts are balsa unless otherwise indicated

BUILDING NOTE:

Entire fuse is sheeted with 1/16 balsa from REAR of lite ply nose doubler to tail post.
(This includes canopy, scoop and vertical fin.)

Glue Lite Ply Doublers (top and bottom parts) in place on one side of fuse.
Edge glue 3 1/16 x 4 x 36" sheets, sand smooth, lay in place without glue and press down against ply doubler.
This will leave a line to cut on the balsa for proper fit to ply doubler
Glue one sheet to fuse side, let dry, then turn fuse over and cut out wing location.

Repeat for other fuse side.

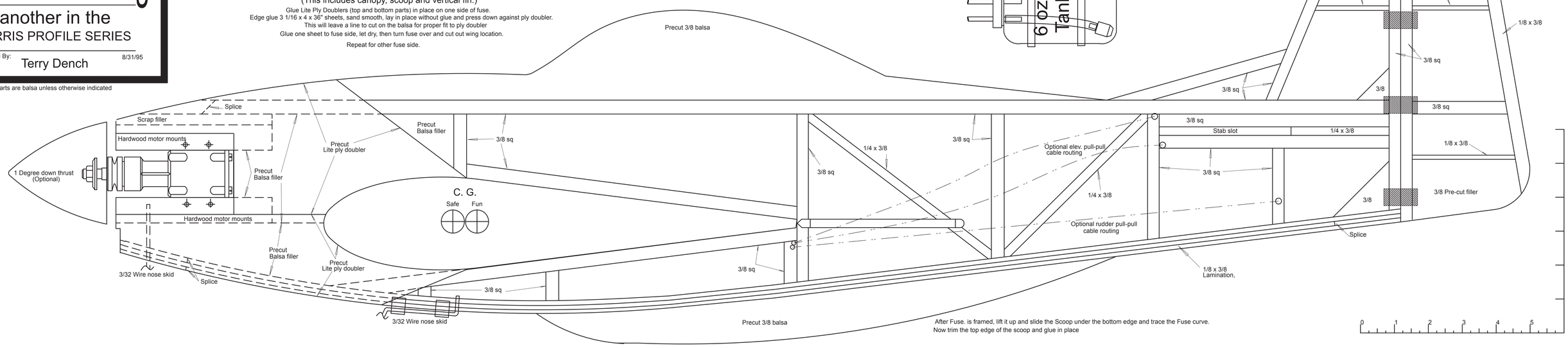

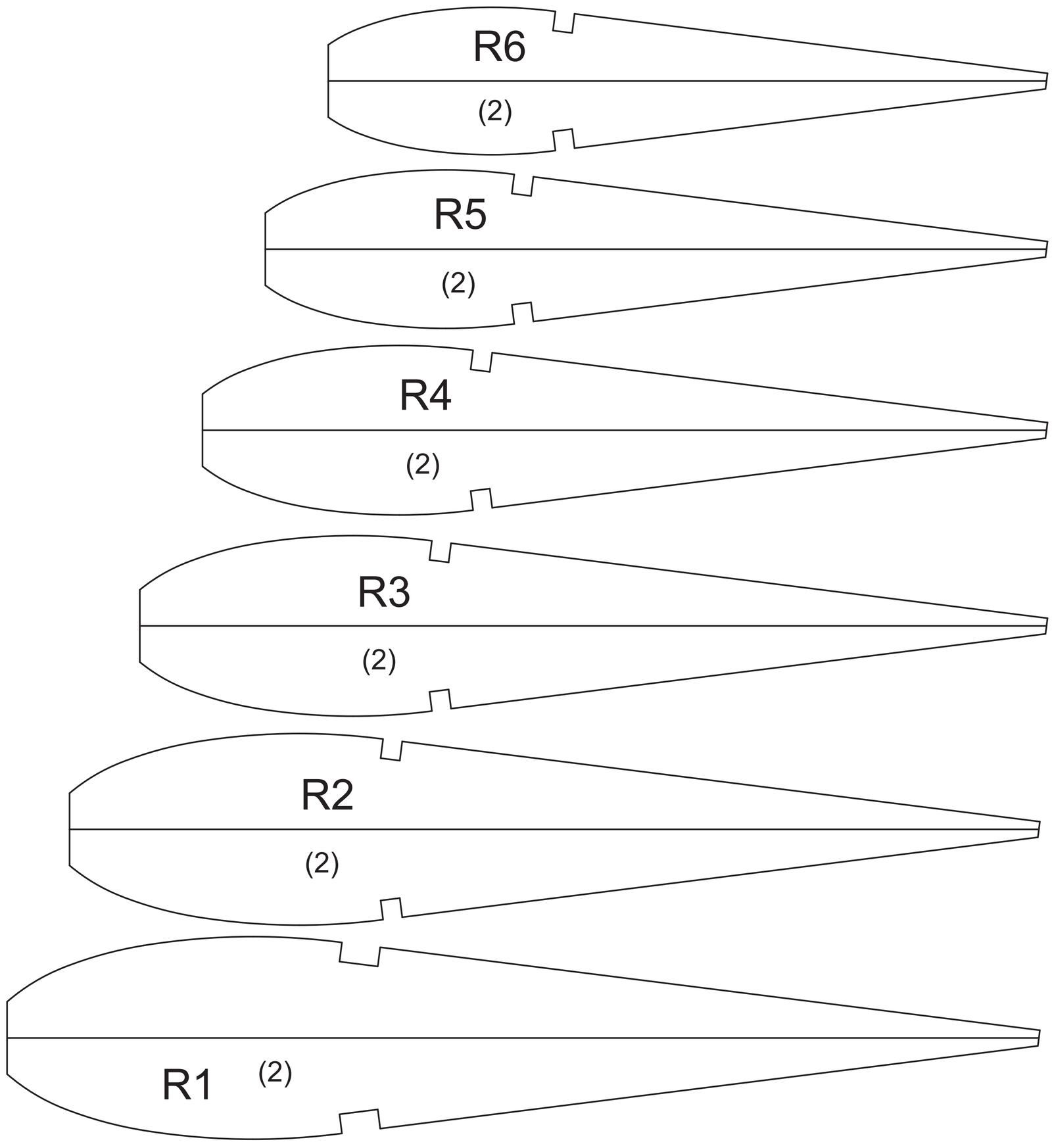

Rib Set for Morris P-51