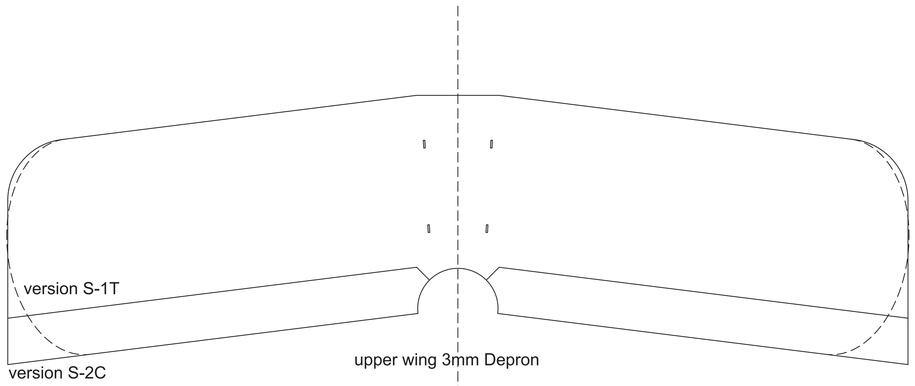

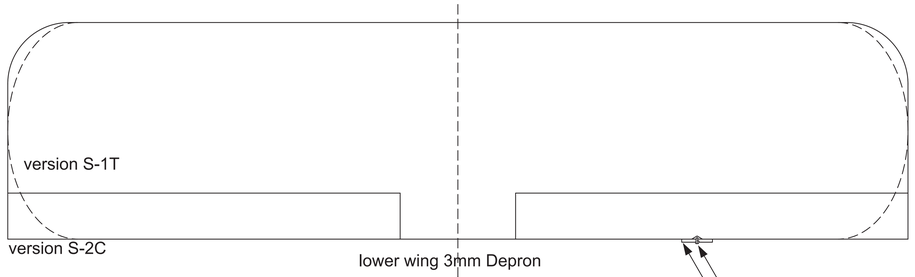

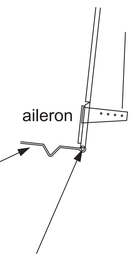

0.8 - 1mm steel rod to connect the ailerons

Carbon rod or tooth pick taped to wing

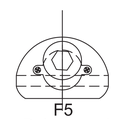

3mm Balsa wood

After cutting the pieces out of Depron, you can use Steadler or Edding waterproof pen for a collorfull deceration. After this you can tape the outside with clear pakking tape. This also prefend the Depron from breaking when bending it into shape.
Electric motor is a Speed 300 6V with a reduction 1:5
Proppelors 9x6 - 10x4,5 can be used.
Let me now how your plane performs ad ovdp@planet.nl
Have lots of fun with this little Depron Airplane!

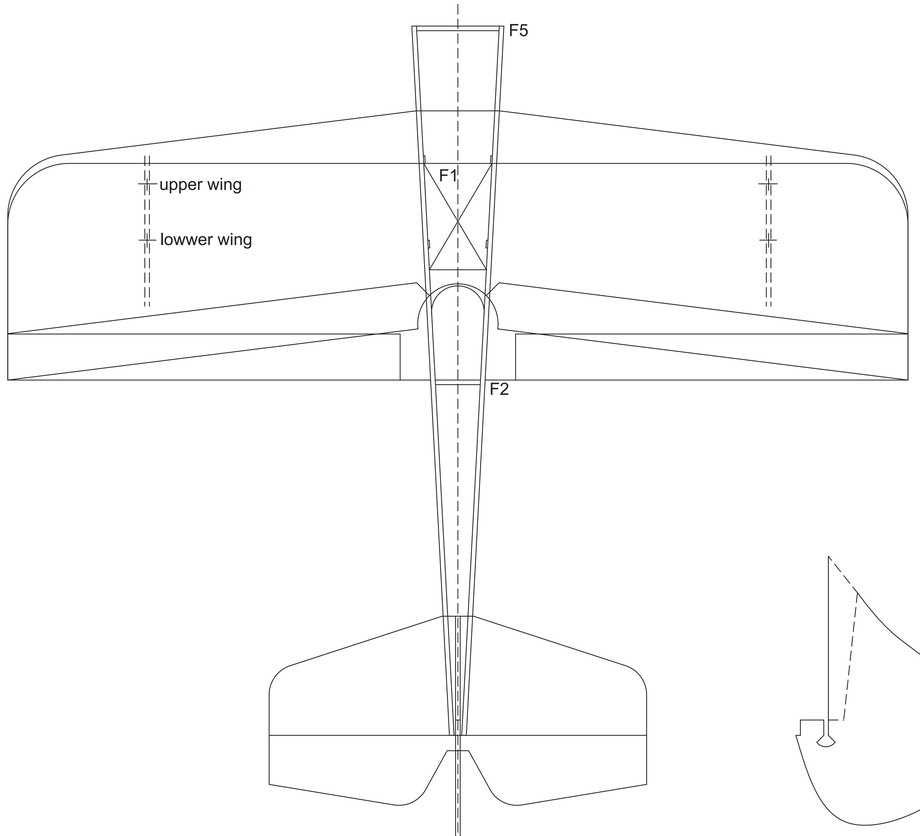

Topview

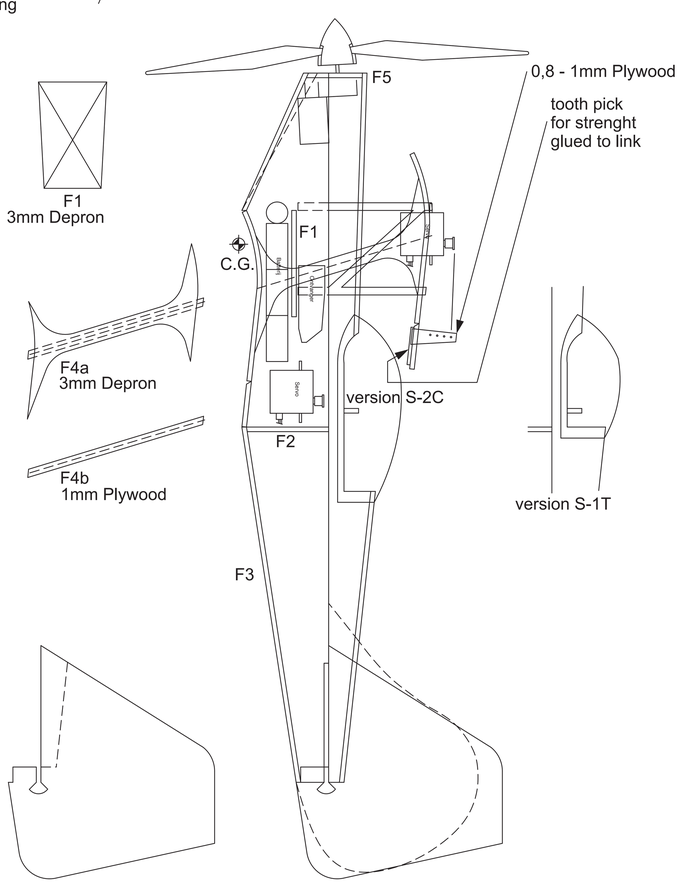

Sideview

F1
3mm Depron

F4a
3mm Depron

F4b
1mm Plywood

version S-1T

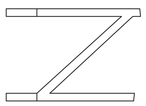

F5
1mm Plywood

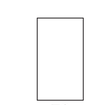

F2
3mm Depron

F3
3mm Depron

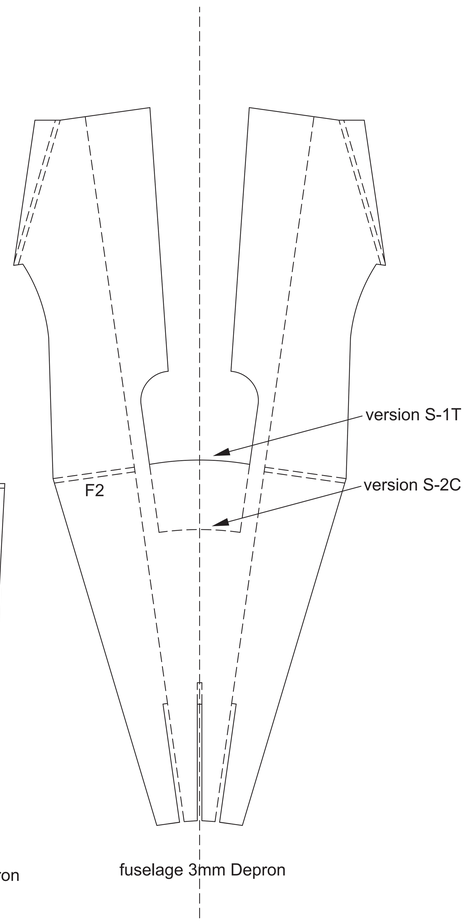

fuselage 3mm Depron

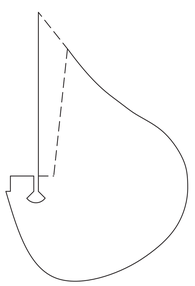

rudder 3mm Depron
version S-1T

rudder 3mm Depron
version S-2C

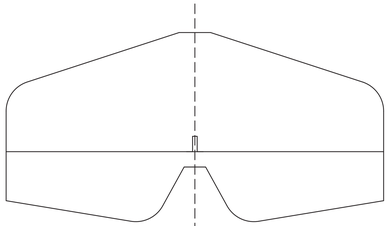

elavetor 3mm Depron
version S-2C

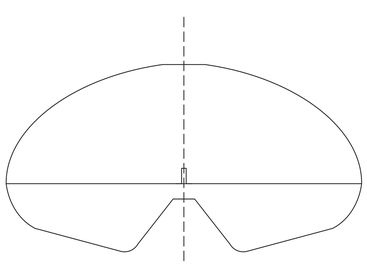

elavetor 3mm Depron
version S-1T

OvdP Productions
Designer: Olaf van der Plaats
Date: 22 december 2002
Schaal 1:1
Versie V2.0

Semi Pitts Special S-1T / S-2C

Wingspan:	586 mm
Length:	525 mm
Wingarea:	16 dm2
Max. weight:	250 g
Wingload:	16 g/dm2

Construction