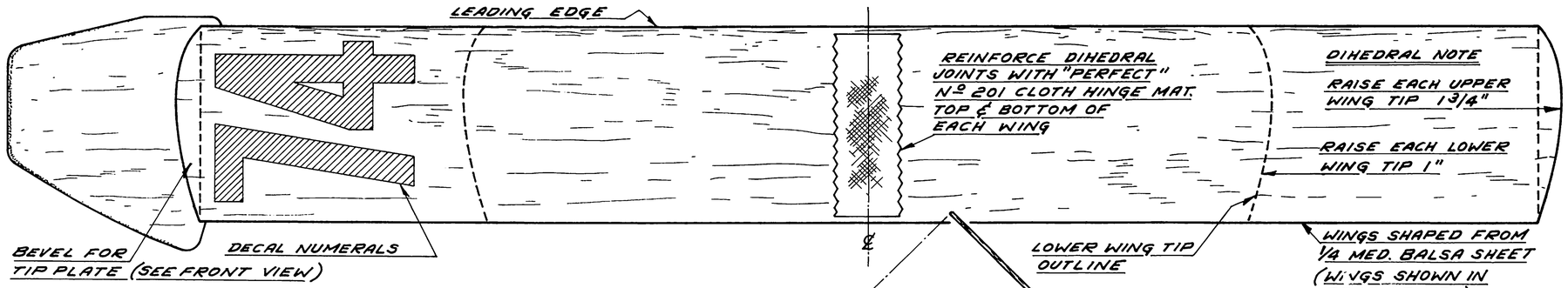
LEADING EDGE
REINFORCE DIHEDRAL JOINTS WITH "PERFECT" Nº 201 CLOTH HINGE MAT. TOP & BOTTOM OF EACH WING
DIHEDRAL NOTE
RAISE EACH UPPER WING TIP 1 3/4"
RAISE EACH LOWER WING TIP 1"
BEVEL FOR TIP PLATE (SEE FRONT VIEW)
DECAL NUMERALS
LOWER WING TIP OUTLINE
WINGS SHAPED FROM 1/4 MED. BALSA SHEET (WINGS SHOWN IN TRUE LENGTH)

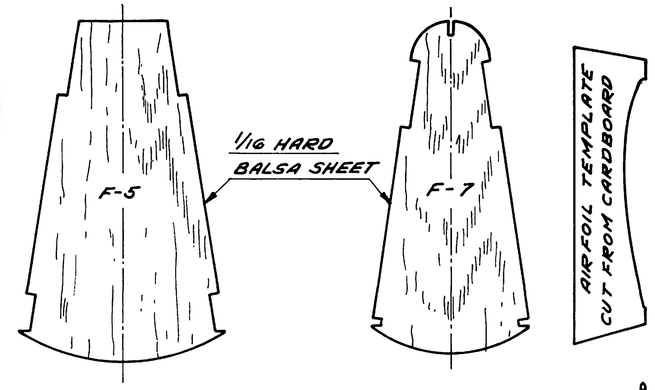
F-5
1/16 HARD BALSA SHEET
F-7
AIRFOIL TEMPLATE CUT FROM CARDBOARD

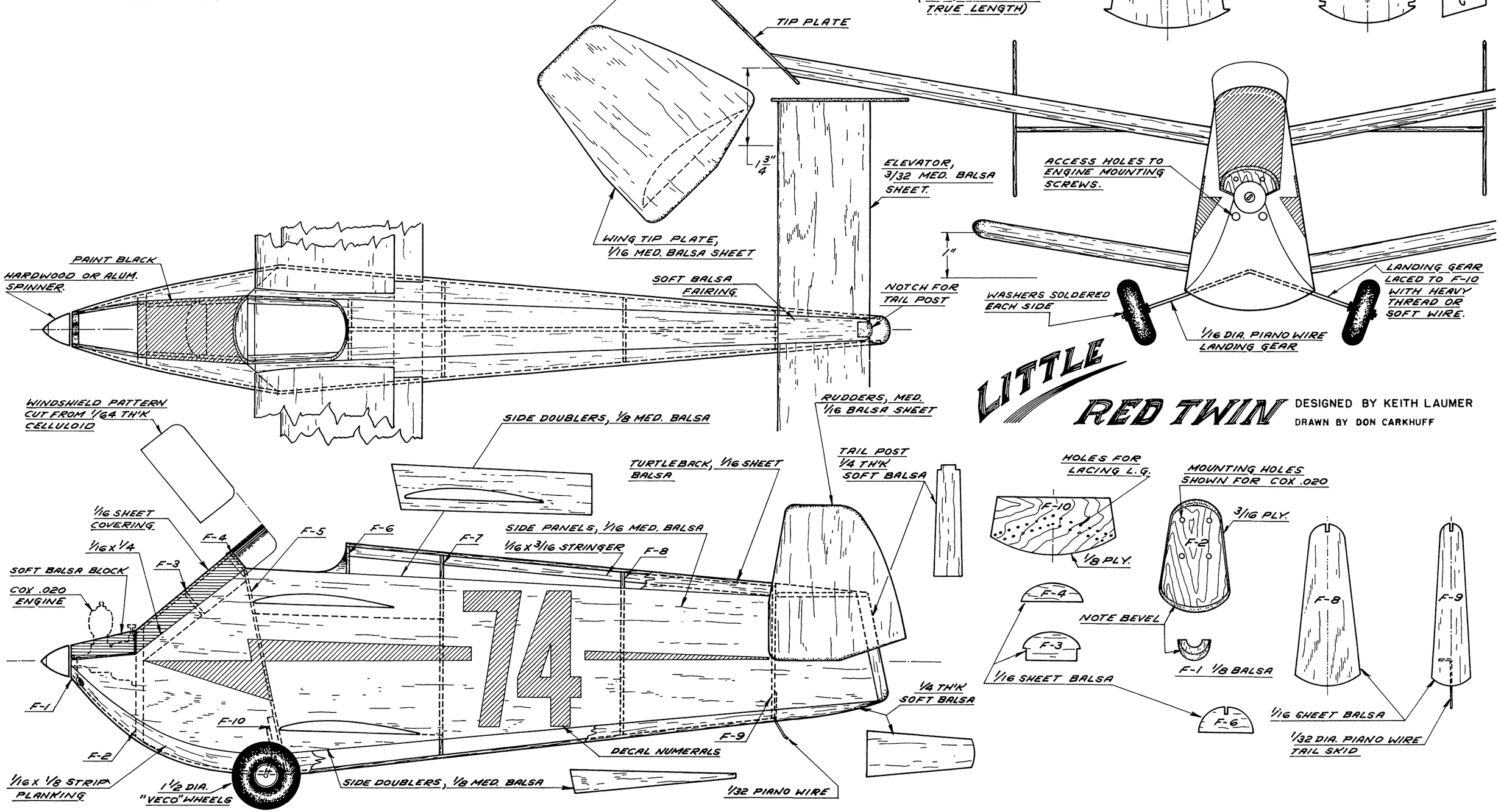
TIP PLATE
1 3/4"
ELEVATOR, 3/32 MED. BALSA SHEET.
ACCESS HOLES TO ENGINE MOUNTING SCREWS.
WING TIP PLATE, 1/16 MED. BALSA SHEET
PAINT BLACK
HARDWOOD OR ALUM. SPINNER.
SOFT BALSA FAIRING.
1"
NOTCH FOR TAIL POST
WASHERS SOLDERED EACH SIDE
LANDING GEAR LACED TO F-10 WITH HEAVY THREAD OR SOFT WIRE.
1/16 DIA. PIANO WIRE LANDING GEAR
LITTLE RED TWIN
DESIGNED BY KEITH LAUMER
DRAWN BY DON CARKHUFF
WINDSHIELD PATTERN CUT FROM 1/64 TH'K CELLULOID
SIDE DOUBLERS, 1/8 MED. BALSA
RUDDERS, MED. 1/16 BALSA SHEET
TAIL POST 1/4 TH'K SOFT BALSA
TURTLEBACK, 1/16 SHEET BALSA
HOLES FOR LACING L.G.
MOUNTING HOLES SHOWN FOR COX .020
F-10
3/16 PLY.
1/16 SHEET COVERING.
F-4
F-5
F-6
F-7
SIDE PANELS, 1/16 MED. BALSA
1/16 x 3/16 STRINGER
F-8
1/16 x 1/4
F-3
SOFT BALSA BLOCK
COX .020 ENGINE
F-2
1/8 PLY.
NOTE BEVEL
F-1 1/8 BALSA
1/16 SHEET BALSA
F-1
F-10
F-9
1/4 TH'K SOFT BALSA
DECAL NUMERALS
F-2
1/16 x 1/8 STRIP PLANKING
1 1/2 DIA. "VECO" WHEELS
SIDE DOUBLERS, 1/8 MED. BALSA
1/32 PIANO WIRE
1/16 SHEET BALSA
1/32 DIA. PIANO WIRE TAIL SKID