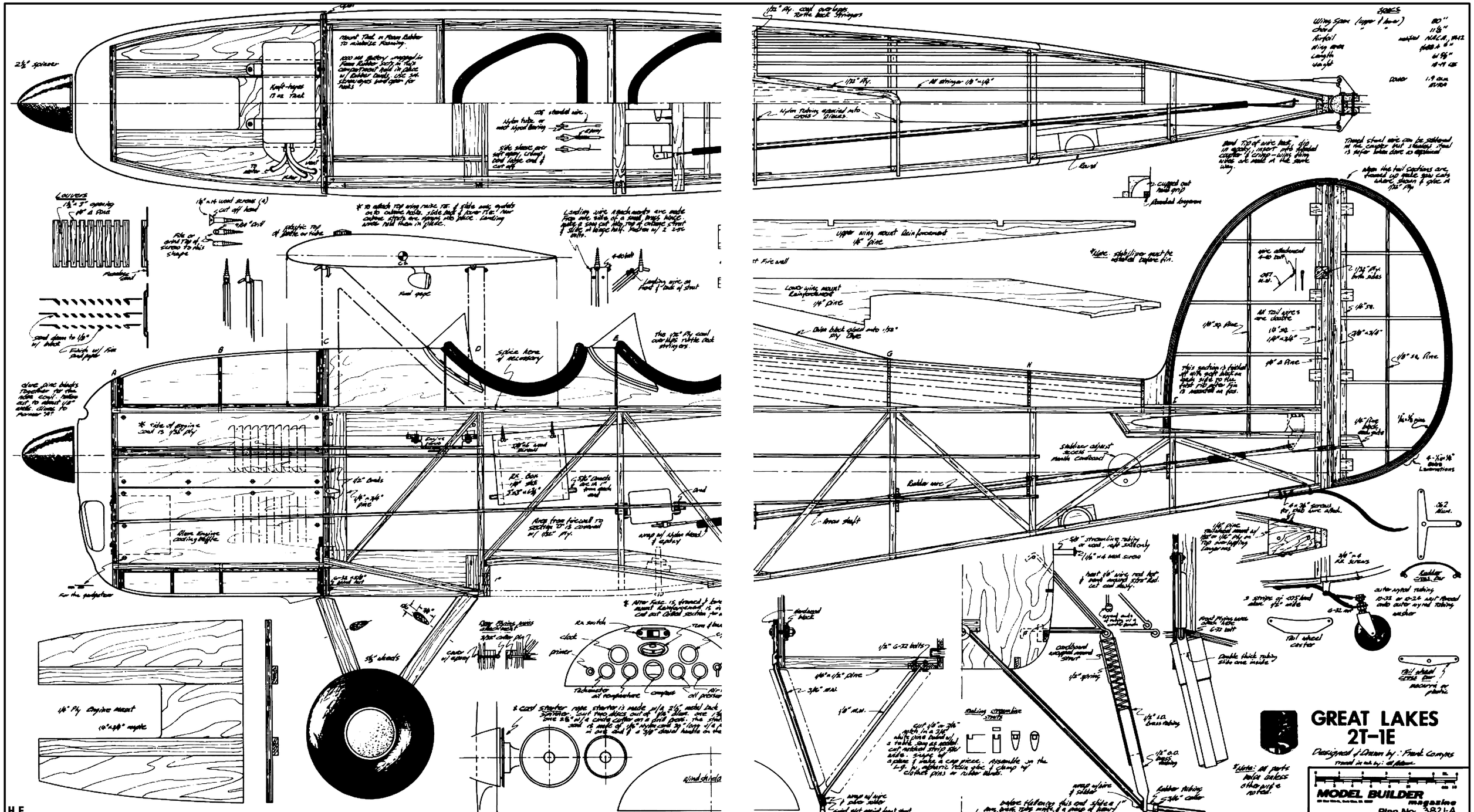
GREAT LAKES
2T-1E
Designed & Drawn by: Frank Comyns
MODEL BUILDER
magazine
Plan No: 3821-A
H.E
SPECS
Wing Span (upper & lower) 30"
Chord 11 5/8"
Airfoil modified NACA, 1942
Wing area 448.6 sq in
Length 41 5/8"
Weight 18-19 oz
Power 1.9 cu in
2T-1E
2½" spinner
Knife-tapes 13 oz tank
Mount Tank in Foam Rubber to minimize Resonating.
1000 MA Battery supplied in Foam Rubber pack in tank compartment and in place w/ Rubber bands. Use sm. screw eyes and again for hooks
Nylon tube or wire tube spool bearing
Side sleeve per left wing, crimp and leave end of cam off
Louvers
1½" x 3" opening
1/8" A Pine
1/8" x 14 wood screws (4)
cut off head
1/64" Drill
File or grind 1/8" of screws to this shape
Rounding tool
plastic top of bottle or tube
Fuel cage
Landing wire 1 pack mounts are made from wire, solder on a small brass hinge, make a sleeve cut into top of strut & slide, or tape half. Fasten w/ 2 2-56 nuts.
4-40 bolt
Landing wire on front & back of strut
Sand down to 1/8" w/ block
Finish w/ fine sand paper
Cowl
Splice here if necessary
The 1/32" Ply cowl overlaps rattle back stringers
Glue pine blocks together for the nose cowl. Round out to about 1/8" wide. Glue to former "A"
* side of engine cowl is 1/32" ply
Engine Mount
Rx Box
Alum. Engine Cooling Baffle
Area from firewall to section D is covered w/ 1/32" ply
wrap w/ nylon thread & epoxy
Rx switch
clock
primer
Tachometer
oil temperature
compass
oil pressure
Rx antenna
Center w/ epoxy
5½" wheels
1/4" Ply Engine mount
1/8" x 3/8" maple
Windshield
1/32" Ply cowl overlaps Rattle back Stringers
1/32" Ply
All stringer 1/8" x 1/4"
Nylon tubing especial into cross pieces.
Wood T20 of wire hook, dip in epoxy, insert into tapered coupler & crimp - wire thin wire at end in the same way.
Tinned steel wire can be soldered to the coupler but stainless steel is safer when done as explained
Cut out hand grip
Rounded bottom
When the tail sections are formed up make sure cuts where shown & glue in 1/32" Ply
Upper wing mount Reinforcement 1/4" pine
Firewall
Lower wing mount Reinforcement 1/4" pine
Glue block glued into 1/32" ply Cowl
*Note: stabilizer must be installed before fin.
wire attachment 4-40 bolt
1/32" Ply both sides
All tail spars are double
1/8" sq.
1/8" x 3/8"
1/4" A Pine
1/8" sq. Pine
This section is folded at with each bolt on each side to the tail fin. The fin after fin is mounted on top.
1/4" Pine both sides
1/8" x 1/8" pine
4-1/8" x 1/4" Balsa Laminations
Stabilizer adjust screw made cardboard
Rubber wire
Brass shaft
4-1/8" x 1/4" screws for tail wire attach.
1/4" Pine laminated mount w/ 1/8" or 1/16" ply on top overlapping longerons
3/8" streamline tubing or wood, left solidly
1/8" x 6 wood screw
heat 1/8" wire red hot & wrap around 3/8" Rod. let cool slowly.
3/8" x 6 RR screws
Rudder cross bar
3 stripe of .005 band alum. 1/2" wide
outer wood tubing 10-32 or 12-24 nut thread onto outer wood tubing washer
6-32 nut
Tail wheel caster
Double thick tubing slide one inside.
Tail wheel cross bar
Bracket back
1/4" x 1/2" pine
1/8" 6-32 bolts
3/8" m.n.
1/8" m.n.
cardboard wrapped around strut
1/2" spring
1/8" o.d. brass tubing
Making streamline struts
cut 1/8" or 3/16" rods in a 3/8" white pine board w/ a table saw as usual. cut rounded strip to the side. snap off a piece & make a cap piece. Assemble on the 1/8" w/ epoxy resin glue & clamp w/ clothes pins or rubber bands.
wrap w/ wire & solder
Rubber tubing
3/16" collar
wrap w/ wire & solder
Good pick spot front strut
before fastening this end splice a 1" wire rope. This must be a piece of heavy wire rope that is called strand.
*Note: all parts pine unless other wise noted.

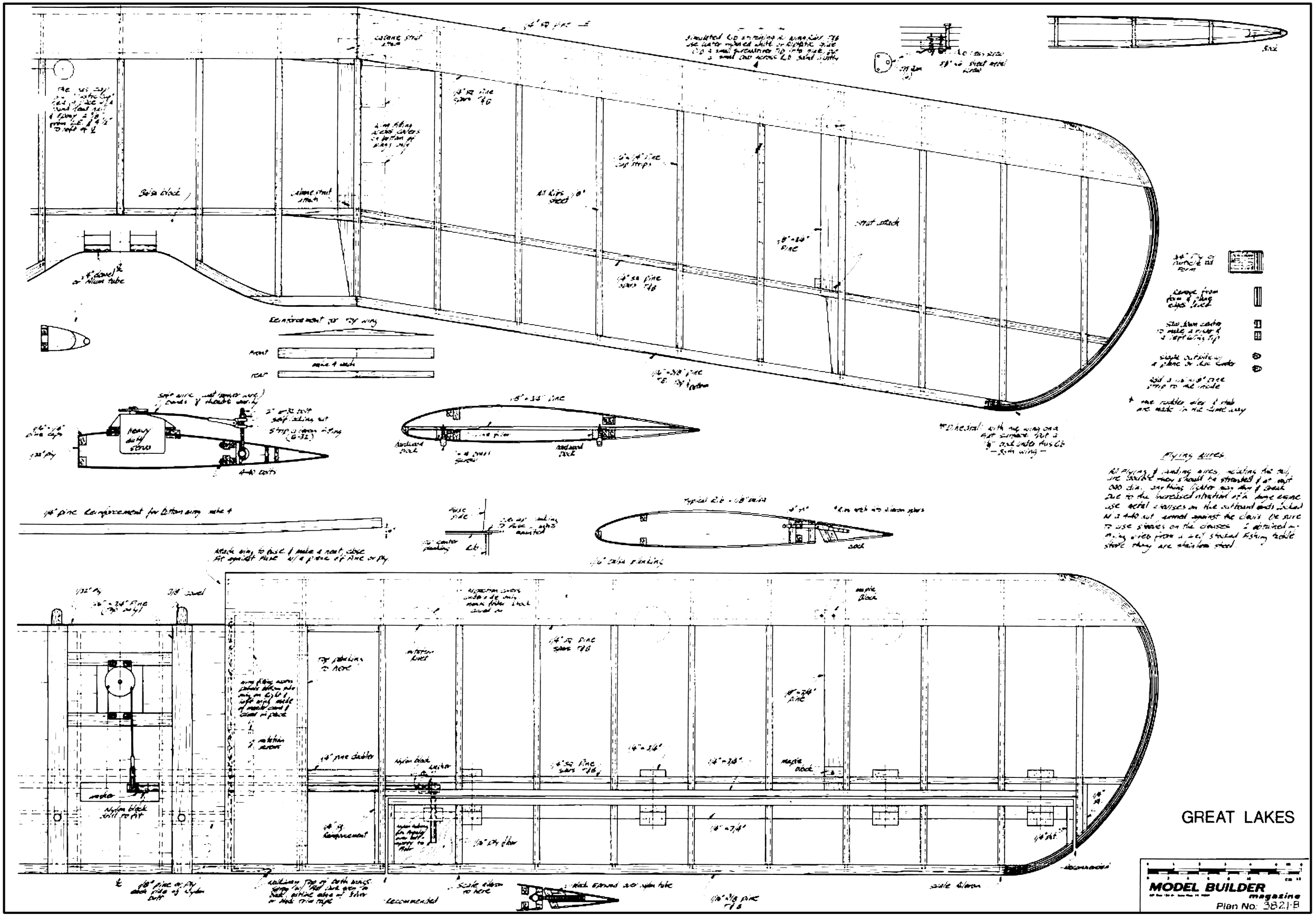
Flying wires
GREAT LAKES
MODEL BUILDER magazine
Plan No. 3821-B

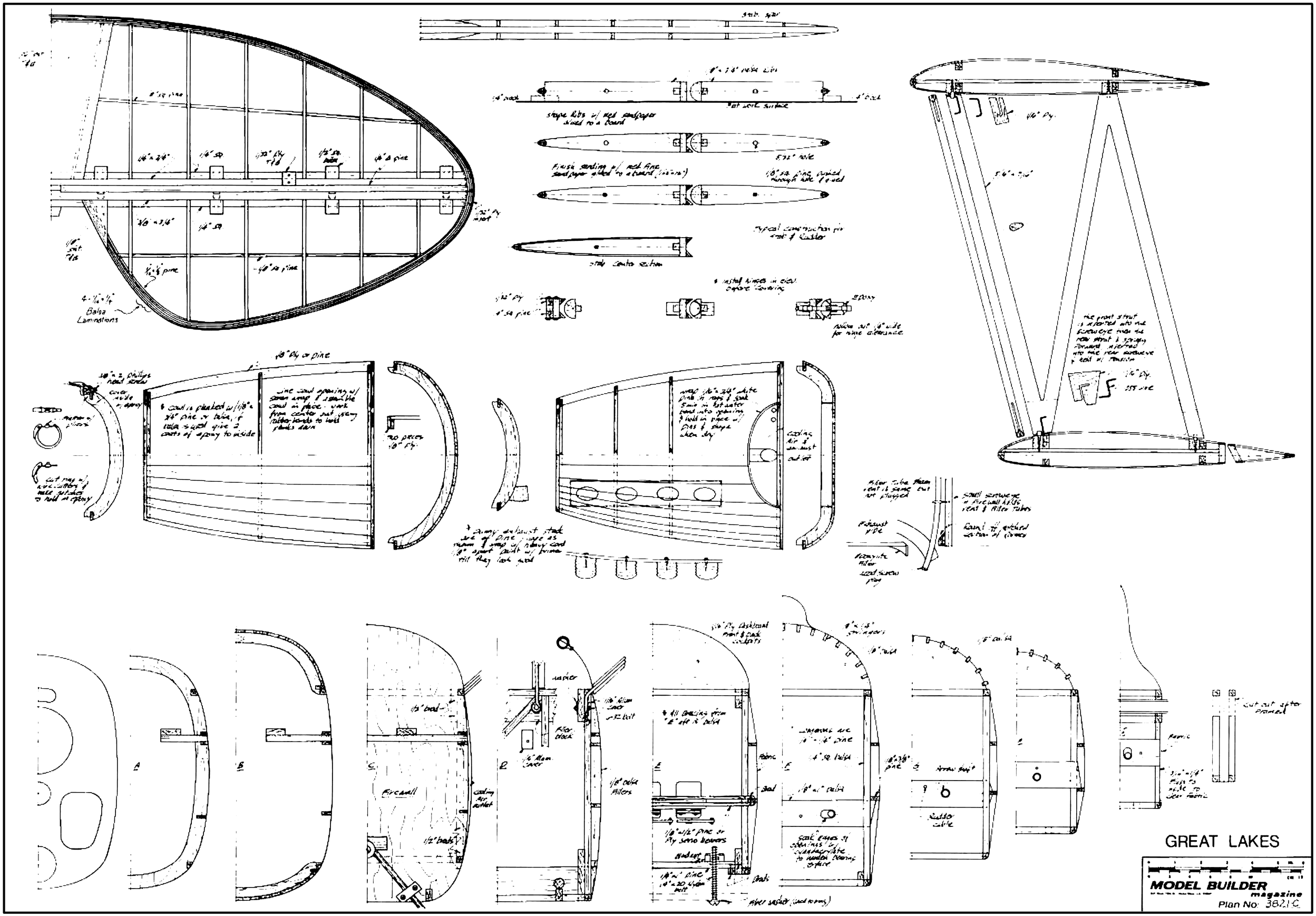
Balsa Laminations
Firewall
GREAT LAKES
MODEL BUILDER magazine
Plan No: 3821C