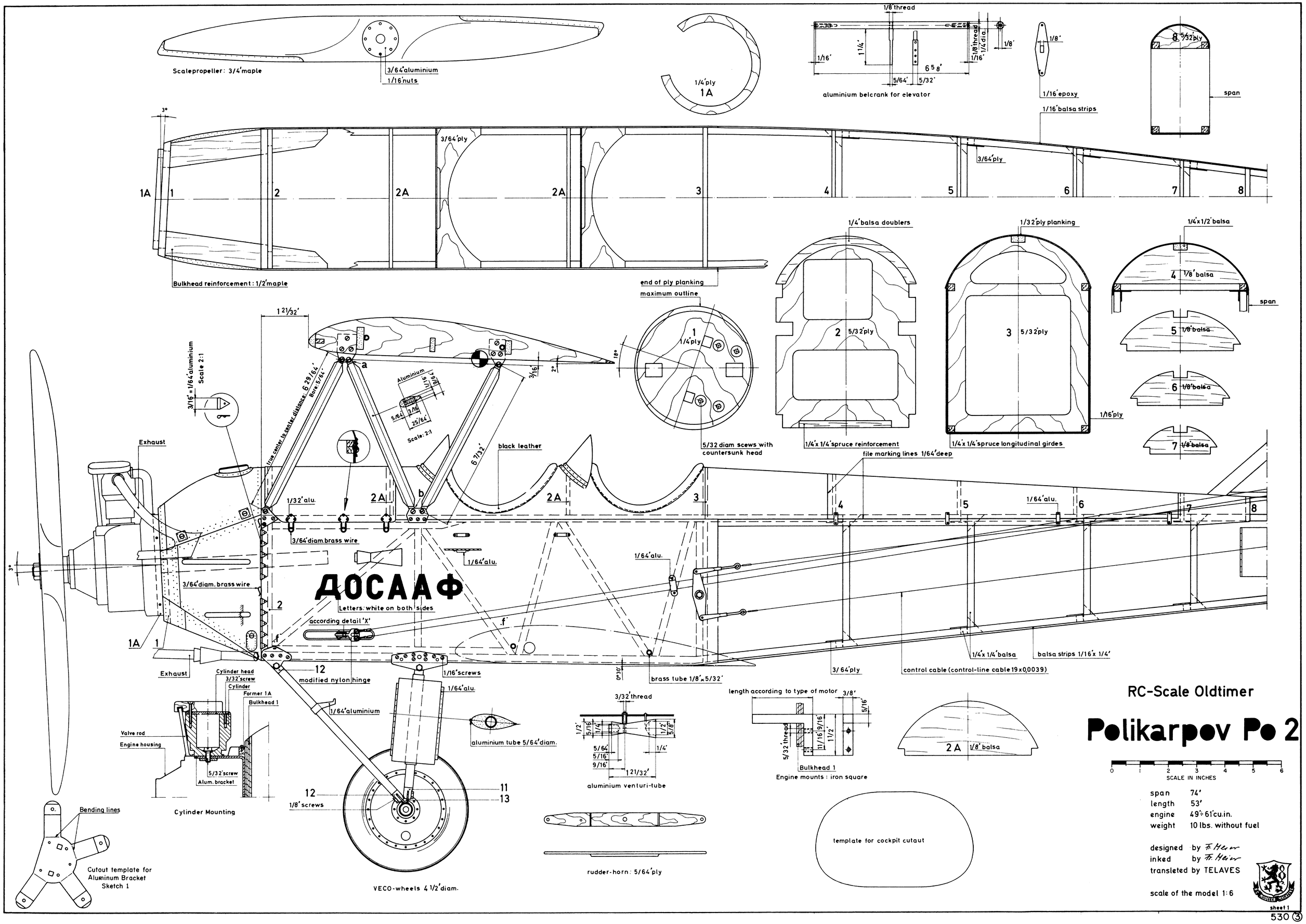
Scalepropeller: 3/4' maple
3/64' aluminium
1/16' nuts
1/4' ply
1A
1/8' thread
1 1/4'
1/16'
6 5/8'
5/64'
5/32'
1/8' thread
1/4' dia.
1/8'
1/16'
aluminium belcrank for elevator
1/8'
1/16' epoxy
8 5/32' ply
span
1/16' balsa strips
3/64' ply
3/64' ply
1A
1
2
2A
2A
3
4
5
6
7
8
Bulkhead reinforcement: 1/2' maple
end of ply planking
maximum outline
1/4' balsa doublers
1/32' ply planking
1/4' x 1/2' balsa
4 1/8' balsa
span
1
1/4' ply
2 5/32' ply
3 5/32' ply
5 1/8' balsa
6 1/8' balsa
1/16' ply
7 1/8' balsa
5/32 diam scews with countersunk head
1/4' x 1/4' spruce reinforcement
1/4' x 1/4' spruce longitudinal girdes
file marking lines 1/64' deep
1 21/32'
3/16' = 1/64' aluminium
Scale 2:1
Aluminium
Scale: 2:1
true center to center distance: 6 29/64'
Bore: 5/64'
6 7/32'
black leather
Exhaust
1/32' alu.
2A
2A
3
4
5
6
7
8
1/64' alu.
3/64' diam. brass wire
1/64' alu.
1/64' alu.
3/64' diam. brass wire
ДОСААФ
Letters: white on both sides
according detail 'X'
1A
1
2
Exhaust
12
modified nylon hinge
1/16' screws
brass tube 1/8' x 5/32'
3/64' ply
control cable (control-line cable 19 x 0,0039)
1/4' x 1/4' balsa
balsa strips 1/16' x 1/4'
Cylinder head
3/32' screw
Cylinder
Former 1A
Bulkhead 1
Valve rod
Engine housing
5/32' screw
Alum. bracket
Cylinder Mounting
1/64' aluminium
1/64' alu.
aluminium tube 5/64' diam.
12
1/8' screws
11
13
VECO-wheels 4 1/2' diam.
3/32' thread
aluminium venturi-tube
length according to type of motor
3/8'
5/16'
5/32' thread
Bulkhead 1
Engine mounts: iron square
2A
1/8' balsa
template for cockpit cutout
rudder-horn: 5/64' ply
Bending lines
Cutout template for Aluminum Bracket Sketch 1
RC-Scale Oldtimer
Polikarpov Po 2
0 1 2 3 4 5 6
SCALE IN INCHES
span 74'
length 53'
engine 49÷61 cu.in.
weight 10 lbs. without fuel
designed by F. Heim
inked by F. Heim
transleted by TELAVES
scale of the model 1:6
sheet 1
530 3

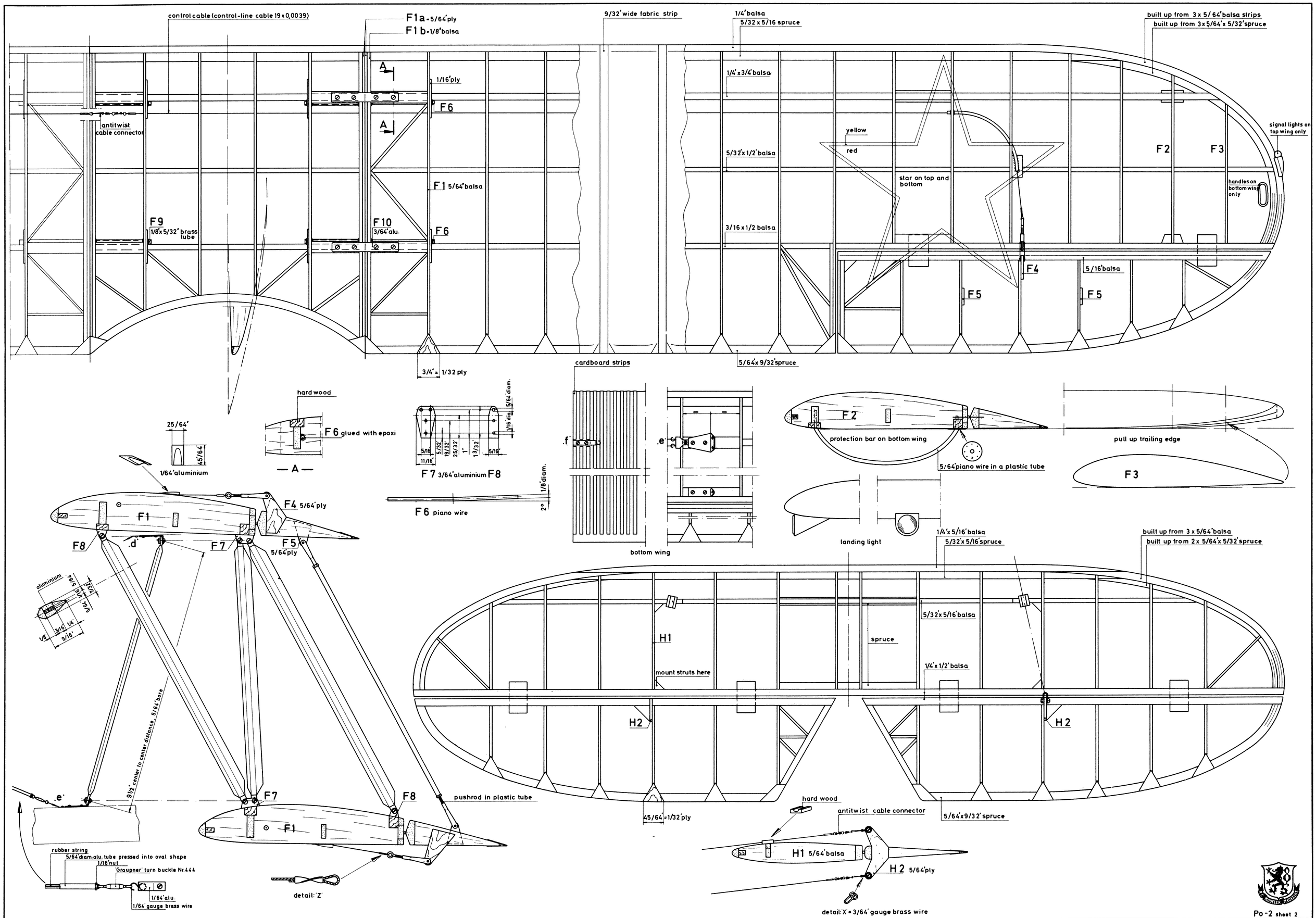
control cable (control-line cable 19 x 0,0039)
F1a - 5/64' ply
F1b - 1/8' balsa
9/32' wide fabric strip
1/4' balsa
5/32 x 5/16 spruce
built up from 3 x 5/64' balsa strips
built up from 3 x 5/64' x 5/32' spruce
1/4' x 3/4' balsa
1/16' ply
F6
A
antitwist cable connector
yellow
red
signal lights on top wing only
5/32' x 1/2' balsa
F2
F3
star on top and bottom
handles on bottom wing only
F1 5/64' balsa
F9
1/8' x 5/32' brass tube
F10
3/64' alu.
3/16 x 1/2 balsa
F4
5/16' balsa
F5
3/4' = 1/32 ply
5/64' x 9/32' spruce
cardboard strips
hard wood
F6 glued with epoxi
25/64'
45/64'
1/64' aluminium
— A —
F7 3/64' aluminium F8
5/16 diam.
1/16 dia.
5/16
11/16
5/32
19/32
25/32
1"
13/32
5/16
F6 piano wire
1/8 diam.
2°
.f
.e
bottom wing
protection bar on bottom wing
5/64' piano wire in a plastic tube
pull up trailing edge
landing light
F1
F4 5/64' ply
F8
.d
F7
F5
5/64' ply
aluminium
1/4'x 5/16' balsa
5/32' x 5/16' spruce
built up from 3 x 5/64' balsa
built up from 2 x 5/64' x 5/32' spruce
5/32' x 5/16' balsa
H1
spruce
mount struts here
1/4' x 1/2' balsa
H2
H2
9 1/2' center to center distance, 5/64' bore
.e
F7
F8
pushrod in plastic tube
F1
45/64' = 1/32' ply
hard wood
antitwist cable connector
5/64' x 9/32' spruce
H1 5/64' balsa
H2 5/64' ply
rubber string
5/64' diam. alu. tube pressed into oval shape
1/16' nut
Graupner' turn buckle Nr. 444
1/64' alu.
1/64' gauge brass wire
detail: 'Z'
detail: 'X' = 3/64' gauge brass wire
Po-2 sheet 2

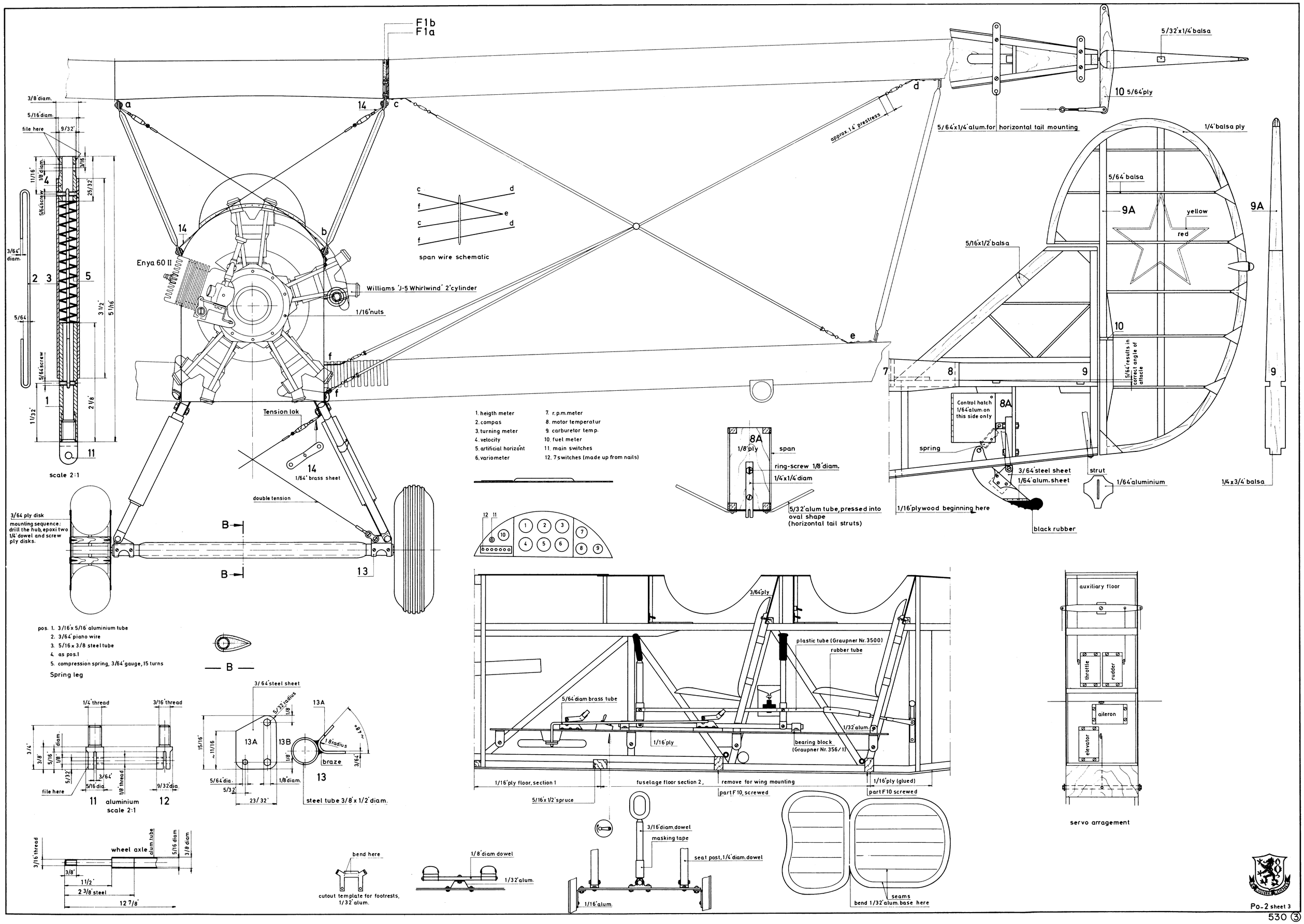
F1b
F1a
3/8" diam.
5/16" diam.
file here
9/32"
11/16"
1/8" diam.
5/16
25/32"
5/64 screw
3/64" diam.
5/64
5/64 screw
1 1/32"
2 1/8"
3 1/2"
5 1/16"
scale 2:1
Enya 60 II
Williams 'J-5 Whirlwind' 2'cylinder
1/16" nuts
span wire schematic
approx. 1/4" prestress
Tension lok
1/64" brass sheet
double tension
3/64 ply disk
mounting sequence: drill the hub, epoxi two 1/4" dowel and screw ply disks.
1. heigth meter
2. compas
3. turning meter
4. velocity
5. artificial horizont
6. variometer
7. r.p.m. meter
8. motor temperatur
9. carburetor temp.
10. fuel meter
11. main switches
12. 7 switches (made up from nails)
5/32"x1/4" balsa
10 5/64" ply
5/64"x1/4" alum. for horizontal tail mounting
1/4" balsa ply
5/64" balsa
9A
yellow
red
5/16"x1/2" balsa
5/64" results in correct angle of attacle
Control hatch 1/64" alum. on this side only
8A
spring
3/64" steel sheet
1/64" alum. sheet
1/16" plywood beginning here
black rubber
strut
1/64" aluminium
1/4 x 3/4" balsa
8A
1/8" ply
span
ring-screw 1/8" diam.
1/4"x1/4" diam
5/32" alum tube, pressed into oval shape (horizontal tail struts)
pos. 1. 3/16" x 5/16" aluminium tube
2. 3/64" piano wire
3. 5/16 x 3/8 steel tube
4. as pos. 1
5. compression spring, 3/64" gauge, 15 turns
Spring leg
1/4" thread
3/16" thread
file here
5/16" dia.
1/8" thread
9/32" dia.
11 aluminium 12
scale 2:1
3/64" steel sheet
5/32" radius
13A
13B
1/8" radius
braze
5/64" dia.
1/8" diam.
23/32"
steel tube 3/8" x 1/2" diam.
3/16" thread
wheel axle
alum. tube
5/16 diam
3/8 diam
3/8"
1 1/2"
2 3/8" steel
12 7/8"
bend here
cutout template for footrests, 1/32" alum.
1/8" diam dowel
1/32" alum.
3/64" ply
plastic tube (Graupner Nr. 3500)
rubber tube
5/64" diam brass tube
1/16" ply
1/32" alum.
bearing block (Graupner Nr. 356/1)
1/16" ply floor, section 1
fuselage floor section 2, remove for wing mounting
1/16" ply (glued)
5/16"x 1/2" spruce
part F 10, screwed
part F 10 screwed
3/16" diam. dowel
masking tape
seat post, 1/4" diam. dowel
1/16" alum.
seams
bend 1/32" alum. base here
auxiliary floor
throttle
rudder
aileron
elevator
servo arragement
Po-2 sheet 3