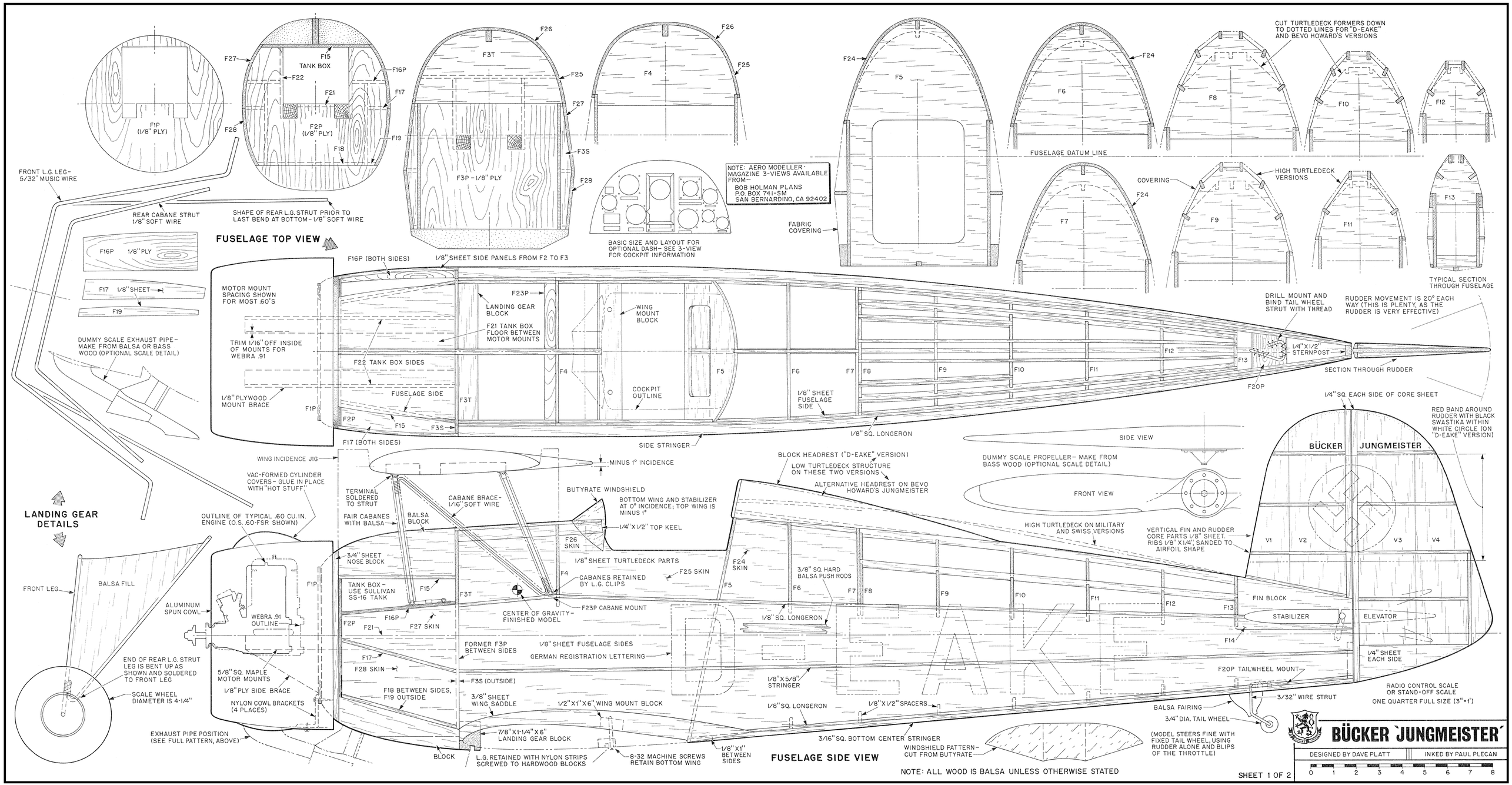
F1P (1/8" PLY)
F2P (1/8" PLY)
F15 TANK BOX
F16P
F17
F18
F19
F21
F22
F27
F28
F3T
F3P - 1/8" PLY
F3S
F4
F25
F26
F5
F6
F7
F8
F9
F10
F11
F12
F13
F14
F20P
F23P
F24
FUSELAGE DATUM LINE
FABRIC COVERING
COVERING
CUT TURTLEDECK FORMERS DOWN TO DOTTED LINES FOR "D-EAKE" AND BEVO HOWARD'S VERSIONS
HIGH TURTLEDECK VERSIONS
TYPICAL SECTION THROUGH FUSELAGE
NOTE: AERO MODELLER MAGAZINE 3-VIEWS AVAILABLE FROM— BOB HOLMAN PLANS P.O. BOX 741-SM SAN BERNARDINO, CA 92402
BASIC SIZE AND LAYOUT FOR OPTIONAL DASH- SEE 3-VIEW FOR COCKPIT INFORMATION
FRONT L.G. LEG- 5/32" MUSIC WIRE
REAR CABANE STRUT 1/8" SOFT WIRE
SHAPE OF REAR L.G. STRUT PRIOR TO LAST BEND AT BOTTOM- 1/8" SOFT WIRE
FUSELAGE TOP VIEW
F16P 1/8" PLY
F17 1/8" SHEET
F19
DUMMY SCALE EXHAUST PIPE- MAKE FROM BALSA OR BASS WOOD (OPTIONAL SCALE DETAIL)
F16P (BOTH SIDES)
1/8" SHEET SIDE PANELS FROM F2 TO F3
MOTOR MOUNT SPACING SHOWN FOR MOST .60'S
TRIM 1/16" OFF INSIDE OF MOUNTS FOR WEBRA .91
1/8" PLYWOOD MOUNT BRACE
F22 TANK BOX SIDES
FUSELAGE SIDE
F17 (BOTH SIDES)
LANDING GEAR BLOCK
F21 TANK BOX FLOOR BETWEEN MOTOR MOUNTS
WING MOUNT BLOCK
COCKPIT OUTLINE
1/8" SHEET FUSELAGE SIDE
SIDE STRINGER
1/8" SQ. LONGERON
DRILL MOUNT AND BIND TAIL WHEEL STRUT WITH THREAD
RUDDER MOVEMENT IS 20° EACH WAY (THIS IS PLENTY, AS THE RUDDER IS VERY EFFECTIVE)
1/4" X 1/2" STERNPOST
SECTION THROUGH RUDDER
1/4" SQ. EACH SIDE OF CORE SHEET
RED BAND AROUND RUDDER WITH BLACK SWASTIKA WITHIN WHITE CIRCLE (ON "D-EAKE" VERSION)
SIDE VIEW
DUMMY SCALE PROPELLER- MAKE FROM BASS WOOD (OPTIONAL SCALE DETAIL)
FRONT VIEW
BÜCKER
JUNGMEISTER
V1
V2
V3
V4
WING INCIDENCE JIG
MINUS 1° INCIDENCE
VAC-FORMED CYLINDER COVERS- GLUE IN PLACE WITH "HOT STUFF"
TERMINAL SOLDERED TO STRUT
CABANE BRACE- 1/16" SOFT WIRE
FAIR CABANES WITH BALSA
BALSA BLOCK
BUTYRATE WINDSHIELD
BOTTOM WING AND STABILIZER AT 0° INCIDENCE; TOP WING IS MINUS 1°
1/4" X 1/2" TOP KEEL
BLOCK HEADREST ("D-EAKE" VERSION)
LOW TURTLEDECK STRUCTURE ON THESE TWO VERSIONS
ALTERNATIVE HEADREST ON BEVO HOWARD'S JUNGMEISTER
HIGH TURTLEDECK ON MILITARY AND SWISS VERSIONS
VERTICAL FIN AND RUDDER CORE PARTS 1/8" SHEET, RIBS 1/8" X 1/4", SANDED TO AIRFOIL SHAPE
LANDING GEAR DETAILS
OUTLINE OF TYPICAL .60 CU.IN. ENGINE (O.S. .60-FSR SHOWN)
3/4" SHEET NOSE BLOCK
F26 SKIN
1/8" SHEET TURTLEDECK PARTS
F24 SKIN
F25 SKIN
CABANES RETAINED BY L.G. CLIPS
3/8" SQ. HARD BALSA PUSH RODS
FRONT LEG
BALSA FILL
ALUMINUM SPUN COWL
WEBRA .91 OUTLINE
TANK BOX- USE SULLIVAN SS-16 TANK
CENTER OF GRAVITY- FINISHED MODEL
F23P CABANE MOUNT
1/8" SQ. LONGERON
FIN BLOCK
STABILIZER
ELEVATOR
F21
F16P
F27 SKIN
FORMER F3P BETWEEN SIDES
1/8" SHEET FUSELAGE SIDES
GERMAN REGISTRATION LETTERING
1/4" SHEET EACH SIDE
END OF REAR L.G. STRUT LEG IS BENT UP AS SHOWN AND SOLDERED TO FRONT LEG
5/8" SQ. MAPLE MOTOR MOUNTS
1/8" PLY SIDE BRACE
F28 SKIN
F3S (OUTSIDE)
F18 BETWEEN SIDES, F19 OUTSIDE
3/8" SHEET WING SADDLE
1/2" X 1" X 6" WING MOUNT BLOCK
1/8" X 5/8" STRINGER
F20P TAILWHEEL MOUNT
RADIO CONTROL SCALE OR STAND-OFF SCALE
ONE QUARTER FULL SIZE (3" = 1')
SCALE WHEEL DIAMETER IS 4-1/4"
NYLON COWL BRACKETS (4 PLACES)
1/8" SQ. LONGERON
1/8" X 1/2" SPACERS
3/32" WIRE STRUT
BALSA FAIRING
3/4" DIA. TAIL WHEEL
EXHAUST PIPE POSITION (SEE FULL PATTERN, ABOVE)
7/8" X 1-1/4" X 6" LANDING GEAR BLOCK
3/16" SQ. BOTTOM CENTER STRINGER
WINDSHIELD PATTERN- CUT FROM BUTYRATE
(MODEL STEERS FINE WITH FIXED TAIL WHEEL, USING RUDDER ALONE AND BLIPS OF THE THROTTLE)
BLOCK
L.G. RETAINED WITH NYLON STRIPS SCREWED TO HARDWOOD BLOCKS
8-32 MACHINE SCREWS RETAIN BOTTOM WING
1/8" X 1" BETWEEN SIDES
FUSELAGE SIDE VIEW
NOTE: ALL WOOD IS BALSA UNLESS OTHERWISE STATED
BÜCKER 'JUNGMEISTER'
DESIGNED BY DAVE PLATT
INKED BY PAUL PLECAN
0 1 2 3 4 5 6 7 8
SHEET 1 OF 2

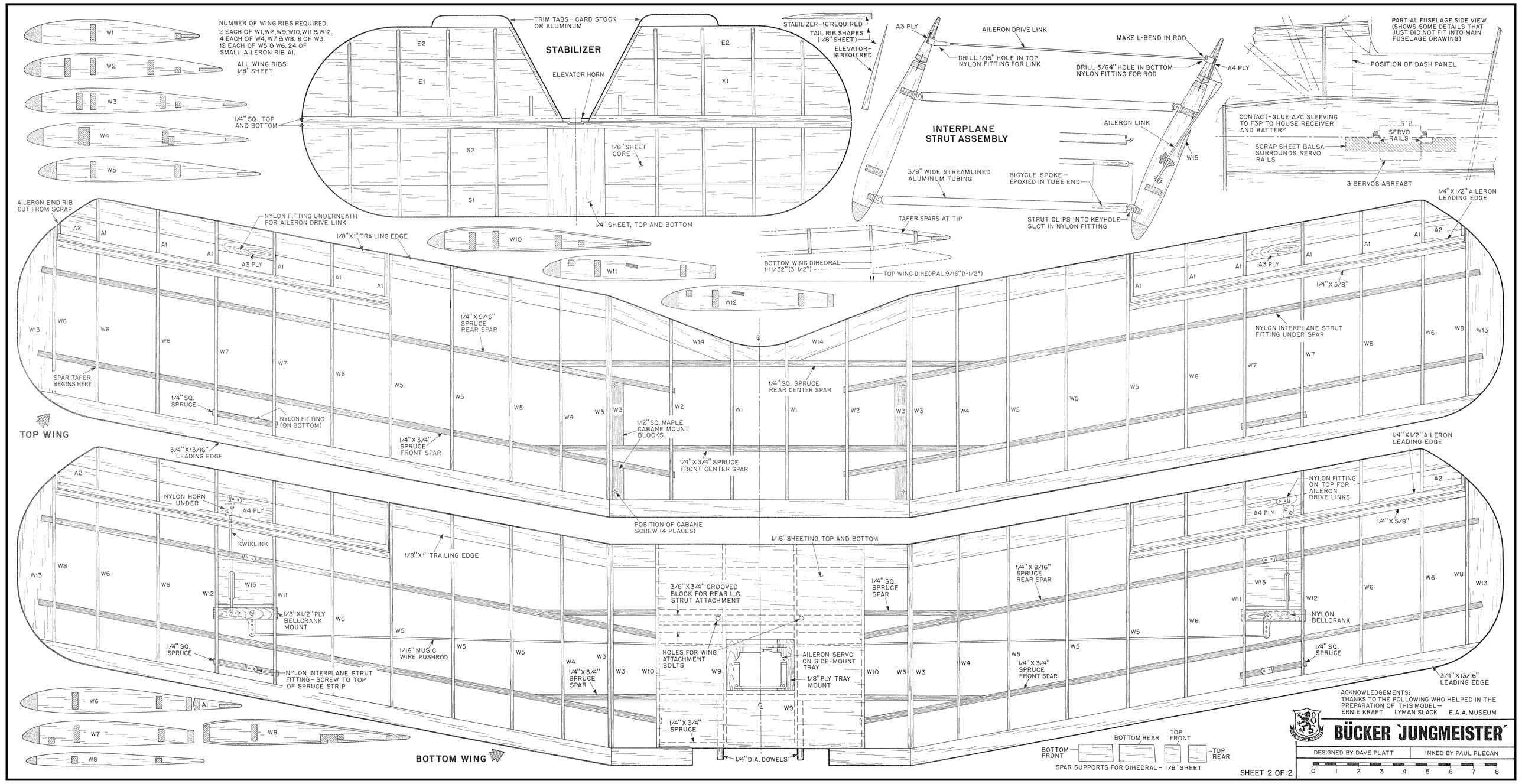
NUMBER OF WING RIBS REQUIRED:
2 EACH OF W1, W2, W9, W10, W11 & W12.
4 EACH OF W4, W7 & W8. 8 OF W3.
12 EACH OF W5 & W6. 24 OF SMALL AILERON RIB A1.
ALL WING RIBS 1/8" SHEET
W1
W2
W3
W4
W5
TRIM TABS - CARD STOCK OR ALUMINUM
STABILIZER
E2
E1
S2
S1
ELEVATOR HORN
1/4" SQ., TOP AND BOTTOM
1/8" SHEET CORE
1/4" SHEET, TOP AND BOTTOM
STABILIZER-16 REQUIRED
TAIL RIB SHAPES (1/8" SHEET)
ELEVATOR-16 REQUIRED
INTERPLANE STRUT ASSEMBLY
A3 PLY
AILERON DRIVE LINK
DRILL 1/16" HOLE IN TOP NYLON FITTING FOR LINK
MAKE L-BEND IN ROD
DRILL 5/64" HOLE IN BOTTOM NYLON FITTING FOR ROD
A4 PLY
AILERON LINK
W15
3/8" WIDE STREAMLINED ALUMINUM TUBING
BICYCLE SPOKE - EPOXIED IN TUBE END
STRUT CLIPS INTO KEYHOLE SLOT IN NYLON FITTING
PARTIAL FUSELAGE SIDE VIEW (SHOWS SOME DETAILS THAT JUST DID NOT FIT INTO MAIN FUSELAGE DRAWING)
POSITION OF DASH PANEL
CONTACT-GLUE A/C SLEEVING TO F3P TO HOUSE RECEIVER AND BATTERY
SERVO RAILS
SCRAP SHEET BALSA SURROUNDS SERVO RAILS
3 SERVOS ABREAST
AILERON END RIB CUT FROM SCRAP
NYLON FITTING UNDERNEATH FOR AILERON DRIVE LINK
1/8"X1" TRAILING EDGE
W10
W11
W12
TAPER SPARS AT TIP
BOTTOM WING DIHEDRAL 1-11/32" (3-1/2°)
TOP WING DIHEDRAL 9/16" (1-1/2°)
1/4"X1/2" AILERON LEADING EDGE
1/4"X 9/16" SPRUCE REAR SPAR
1/4"X 5/8"
NYLON INTERPLANE STRUT FITTING UNDER SPAR
SPAR TAPER BEGINS HERE
1/4" SQ. SPRUCE
NYLON FITTING (ON BOTTOM)
1/4" SQ. SPRUCE REAR CENTER SPAR
1/2" SQ. MAPLE CABANE MOUNT BLOCKS
1/4"X 3/4" SPRUCE FRONT SPAR
1/4"X 3/4" SPRUCE FRONT CENTER SPAR
3/4"X13/16" LEADING EDGE
TOP WING
NYLON HORN UNDER
A4 PLY
KWIKLINK
NYLON FITTING ON TOP FOR AILERON DRIVE LINKS
POSITION OF CABANE SCREW (4 PLACES)
1/16" SHEETING, TOP AND BOTTOM
3/8"X3/4" GROOVED BLOCK FOR REAR L.G. STRUT ATTACHMENT
1/4" SQ. SPRUCE SPAR
1/8"X1/2" PLY BELLCRANK MOUNT
NYLON BELLCRANK
1/16" MUSIC WIRE PUSHROD
HOLES FOR WING ATTACHMENT BOLTS
AILERON SERVO ON SIDE-MOUNT TRAY
1/8" PLY TRAY MOUNT
1/4"X 3/4" SPRUCE SPAR
NYLON INTERPLANE STRUT FITTING- SCREW TO TOP OF SPRUCE STRIP
1/4"X 3/4" SPRUCE
1/4" DIA. DOWELS
BOTTOM WING
BOTTOM FRONT
BOTTOM REAR
TOP FRONT
TOP REAR
SPAR SUPPORTS FOR DIHEDRAL - 1/8" SHEET
ACKNOWLEDGEMENTS:
THANKS TO THE FOLLOWING WHO HELPED IN THE PREPARATION OF THIS MODEL—
ERNIE KRAFT LYMAN SLACK E.A.A. MUSEUM
BÜCKER 'JUNGMEISTER'
DESIGNED BY DAVE PLATT
INKED BY PAUL PLECAN
0 1 2 3 4 5 6 7 8
SHEET 2 OF 2

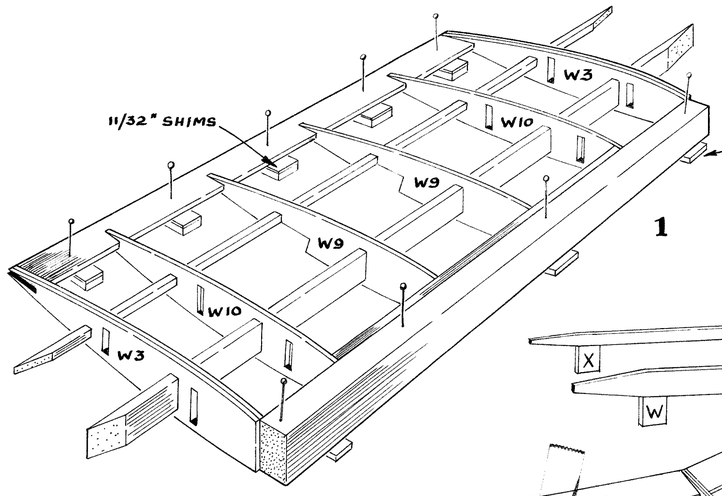

1

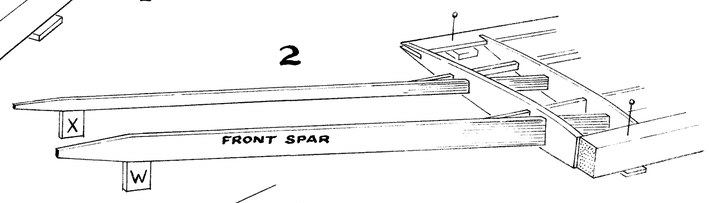

2

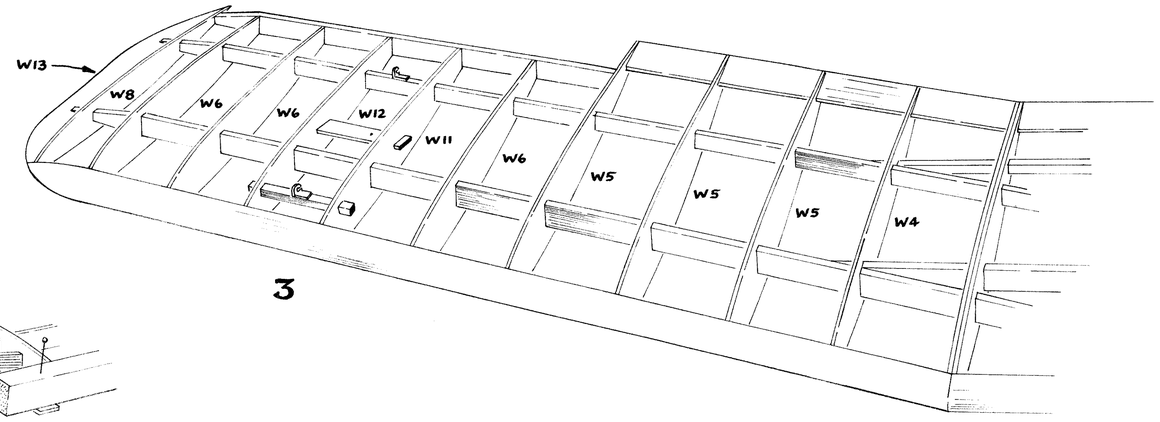

3

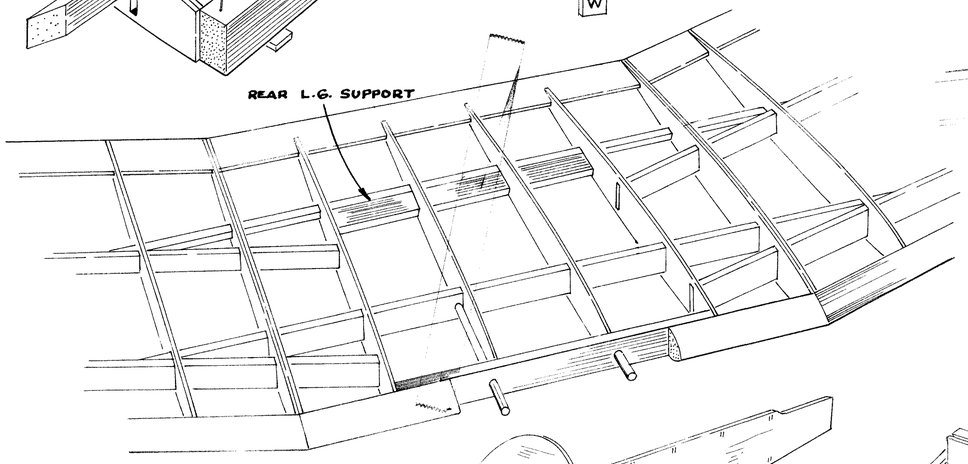

4

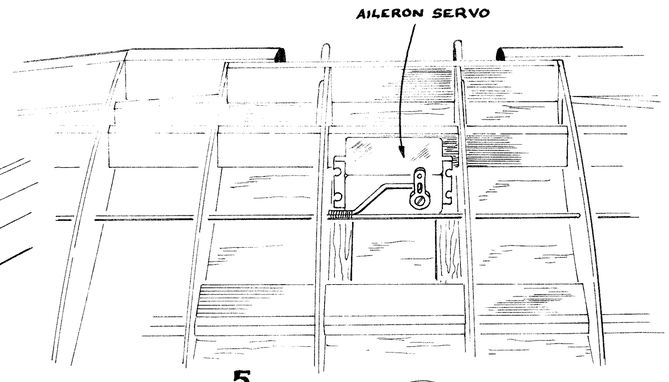

5

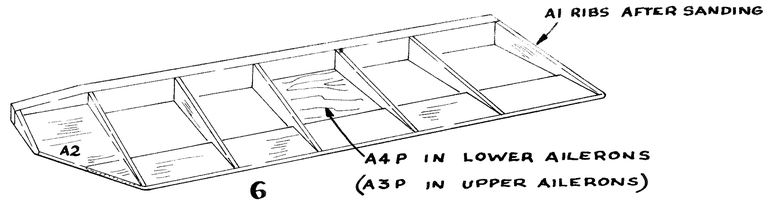

6

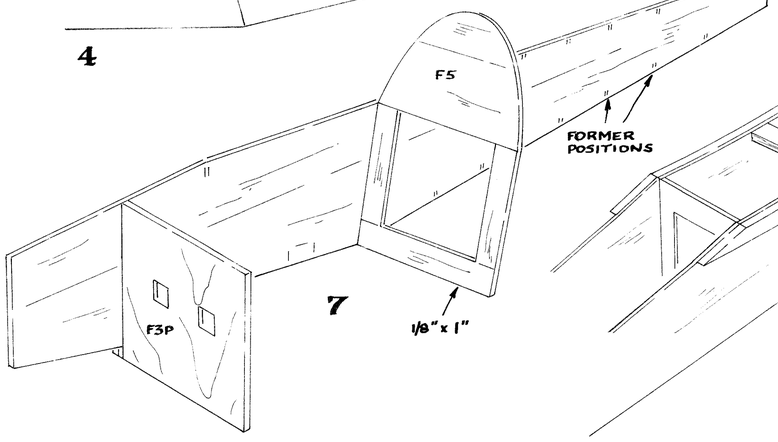

7

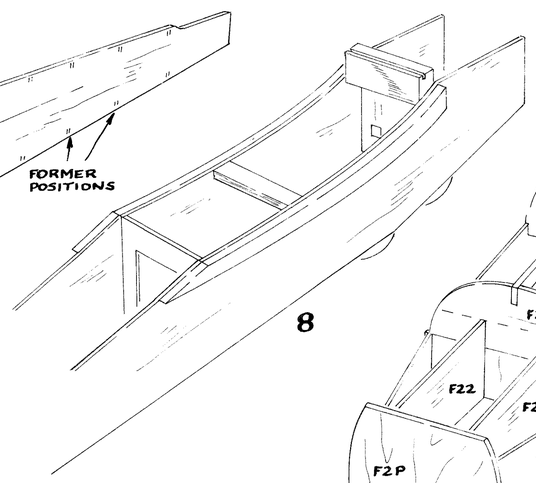

8

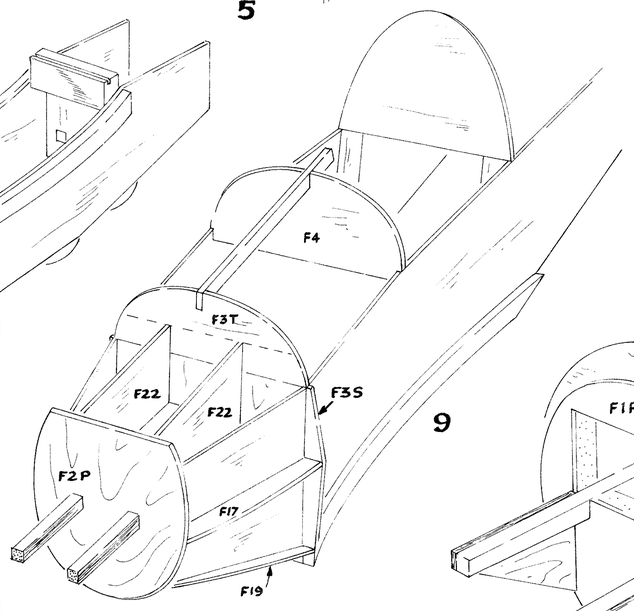

9

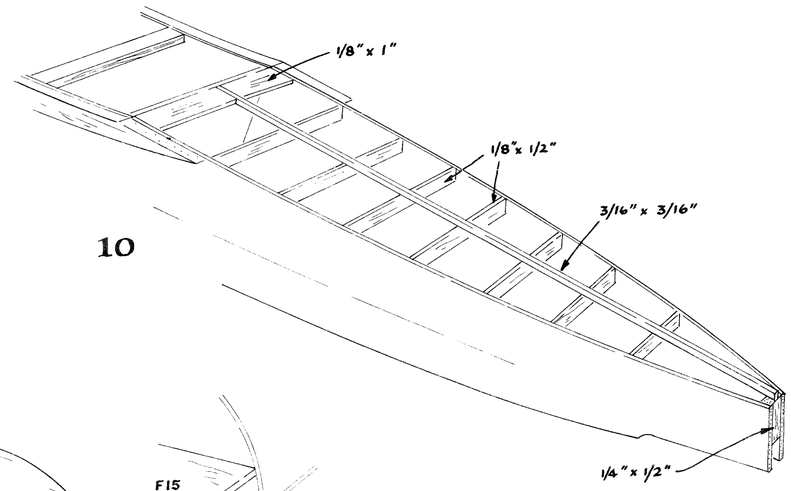

10

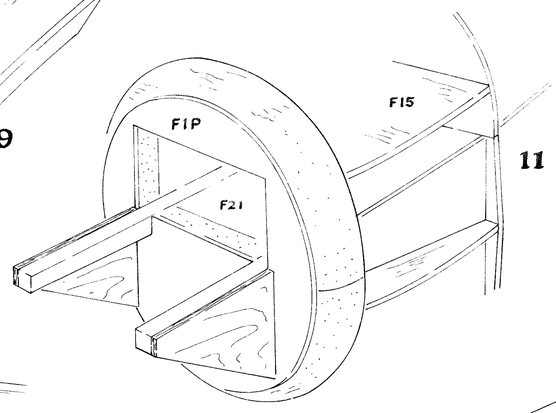

11

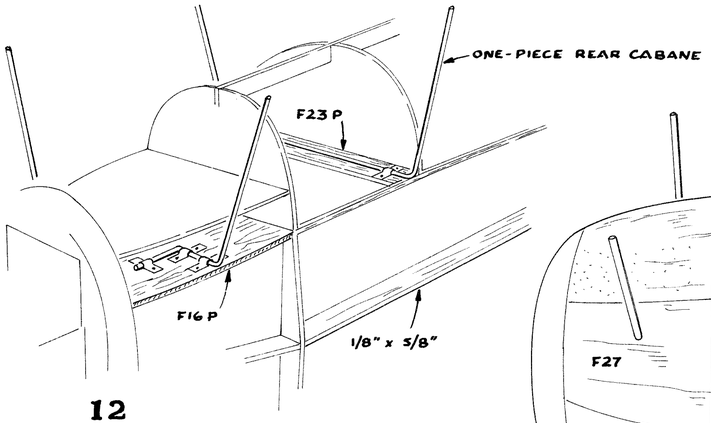

12

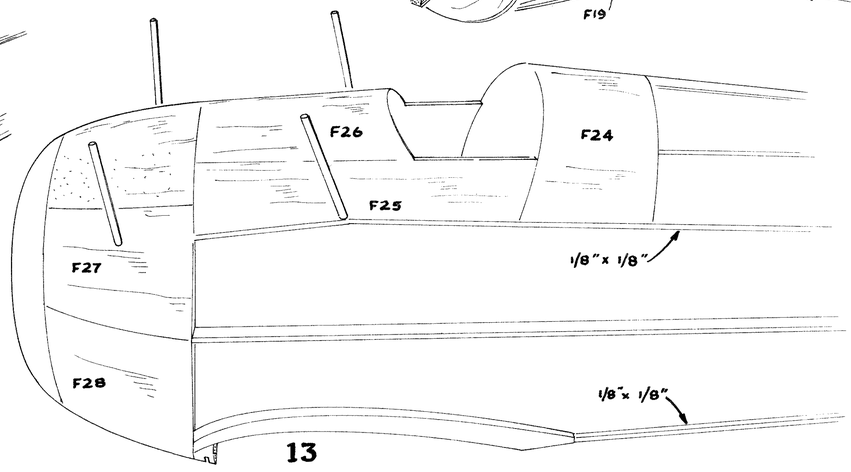

13

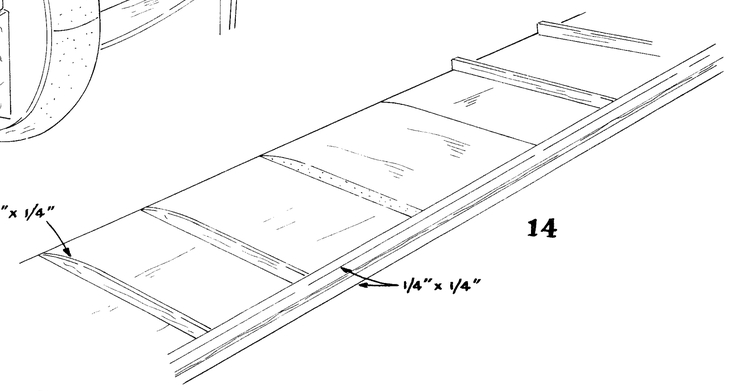

14

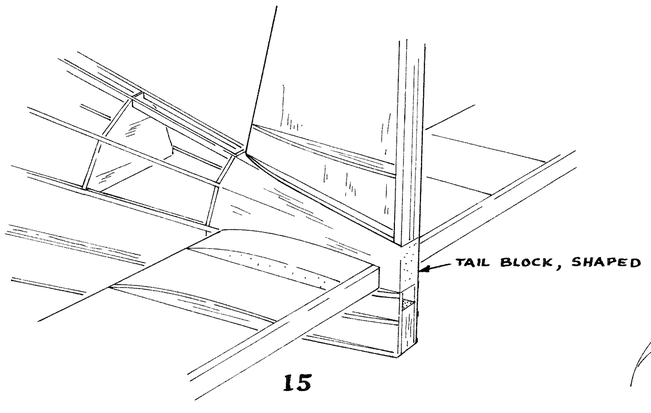

15

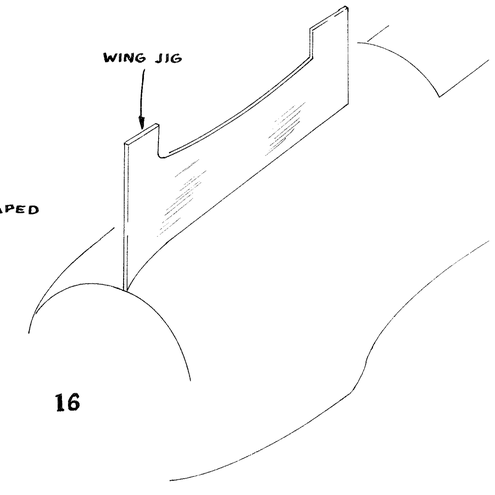

16

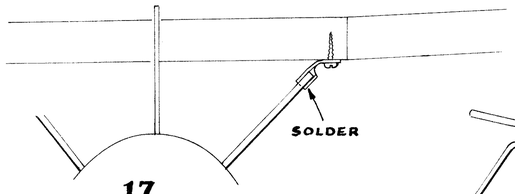

17

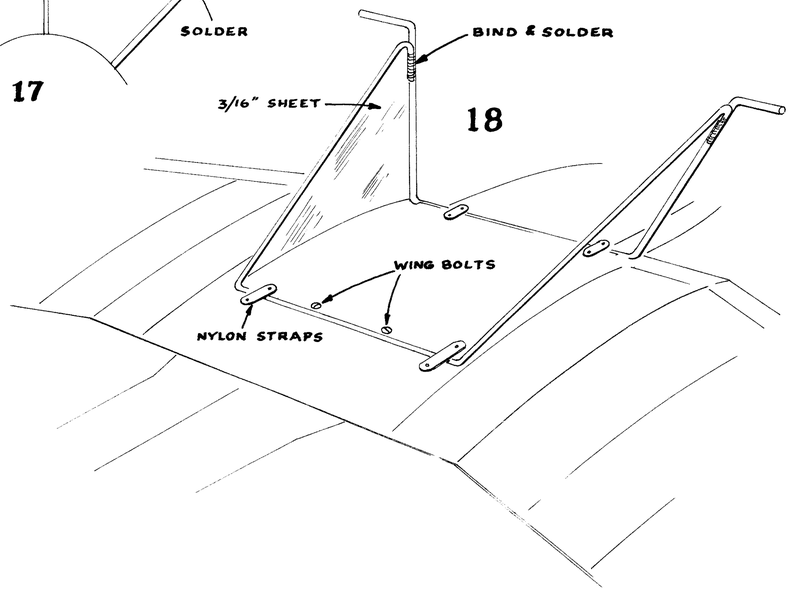

18

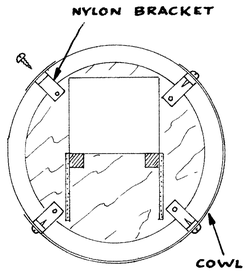

19

BÜCKER 'JUNGMEISTER'